Model Name: GA-H67MA-D2H-B3

Revision 1.1

SHEET	TITLE
01	COVER SHEET
02	BOM & PCB MODIFY HISTORY
03	BLOCK DIAGRAM
04	CPU_LGA1155-A
05	CPU_LGA1155-B
06	CPU_LGA1155-C
07	DDR III CHANNEL A
08	DDR III CHANNEL B
09	PCH_FDI,DMI,USB,PCIE,NVRAM
10	PCH_DP,CLK BUFFER
11	PCH_HOST,SATA,PCI
12	PCH_GPIO,CTRL,AUDIO
13	PCH_PWR,GND
14	PCI EXPRESS*16 SLOT
15	PCI EXPRESS*4 SLOT
16	PCI EXPRESS*1x2 SLOT
17	ITE 8728 LPC IO
18	COM,KB_USB,USB_ESATA,-PROCHOT
19	HWM,FAN CTRL
20	DUAL BIOS
21	FP,FUSB,SPK,SATALED
22	ALC889
23	REAR AUDIO JACK
24	REALTEK RTL8111E
25	HDMI/DVI
26	USB3.0-UP720200A
27	DISCRETE POWER

SHEET	TITLE
28	ATX
29	ISL6322_CPU_VTT
30	VCORE ISL6364_1
31	VCORE ISL6364_2
32	VCORE ISL6364_3
33	VCORE ISL6364_4,IT8275E

Model Name: GA-H67MA-D2H-B3

Revision 1.1

Component value change history

2011/02/09

Data	Change Item	Reason
2010/07/15	RENAME	
2010/08/31	ADD USB3.0 GEN2 SW	
2010/09/06	FIX ERP 5VSB DROP	
2010/09/15	FIX 100MHZ PCIE CLK USB3	
2010/10/05	R1.0 PBOM.	
2010/10/11	FPBOM:10B.MODIFY DES PHASE RC DELAY.	
2010/10/19	FPBOM:10C.	
2010/12/02	R1.1 MODIFY MOS POWER PAK,FERRITE CORE CHOKE,CODEC ALC889	
2011/01/04	CEB4,CBC5-->22U,RTL8111E/VL,NEC UPD720200A.	
2011/01/20	MODIFY USB30_20 LIBRARY.S-VID PVIDSLCK PULL 100/4/1 .DES 2N7002-->NXP.IT8728 LOW TEMP. ISSUE.	FPBOM:9MH67D2H-00-11C
2011/01/24	FIX DES 2N7002-->NEC.	PBOM:9MH67D2H-00-11D
2011/02/09	RENAME H67MA-D2H-B3.PCH/B3 CHIPSET.	

Circuit or PCB layout change

DATE	Change Item	Reason

Gigabyte Technology

Title: BOM & PCB MODIFY HISTORY

Size: Custom | Document Number: GA-H67MA-D2H-B3 | Rev: 1.1

Date: Wednesday, February 09, 2011 | Sheet 2 of 33

BLOCK DIAGRAM

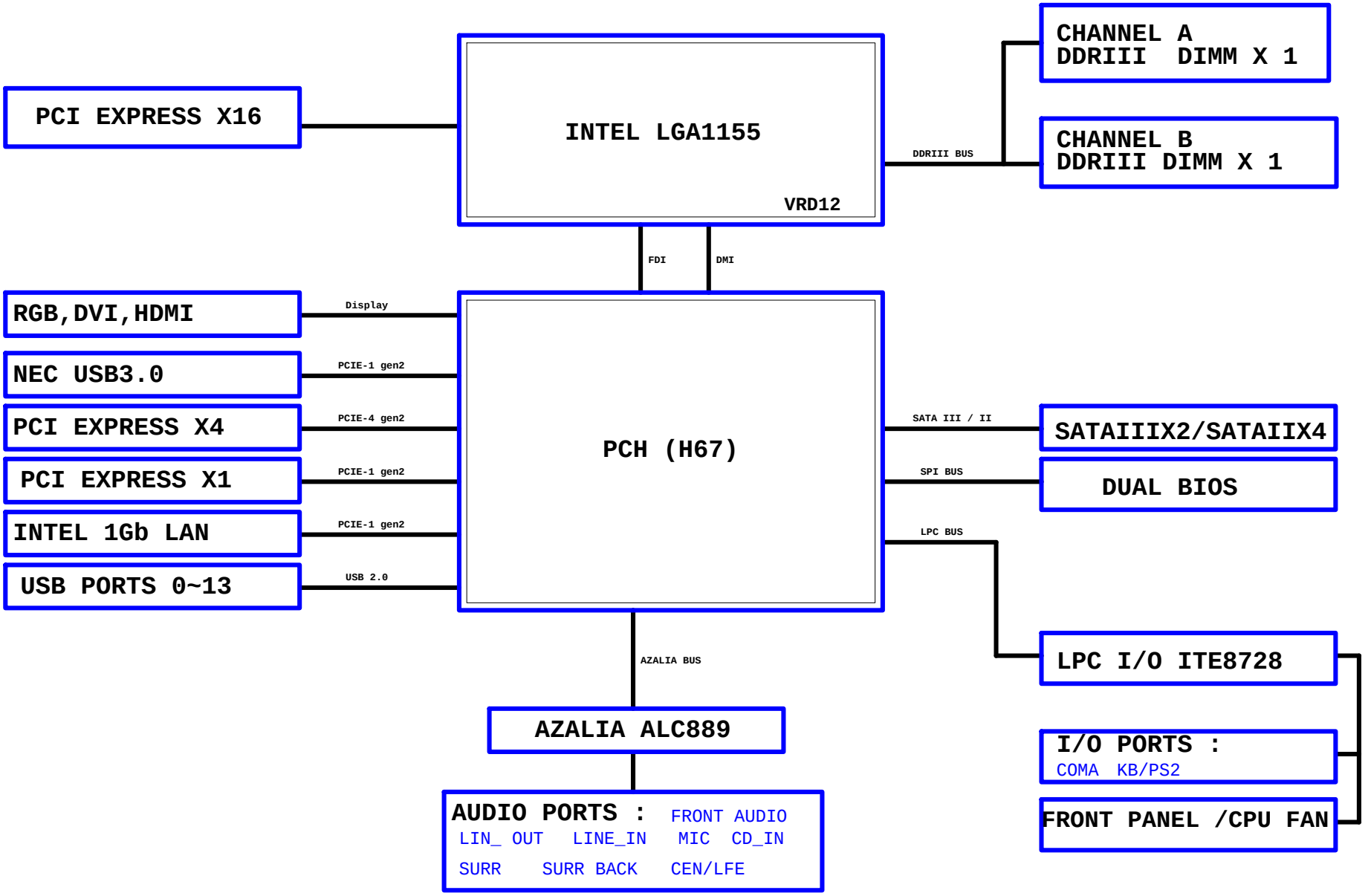

Gigabyte Technology		
Title: BLOCK DIAGRAM		
Size: C	Document Number: GA-H67MA-D2H-B3	Rev: 1.1
Date: Wednesday, February 09, 2011	Sheet 3 of 33	

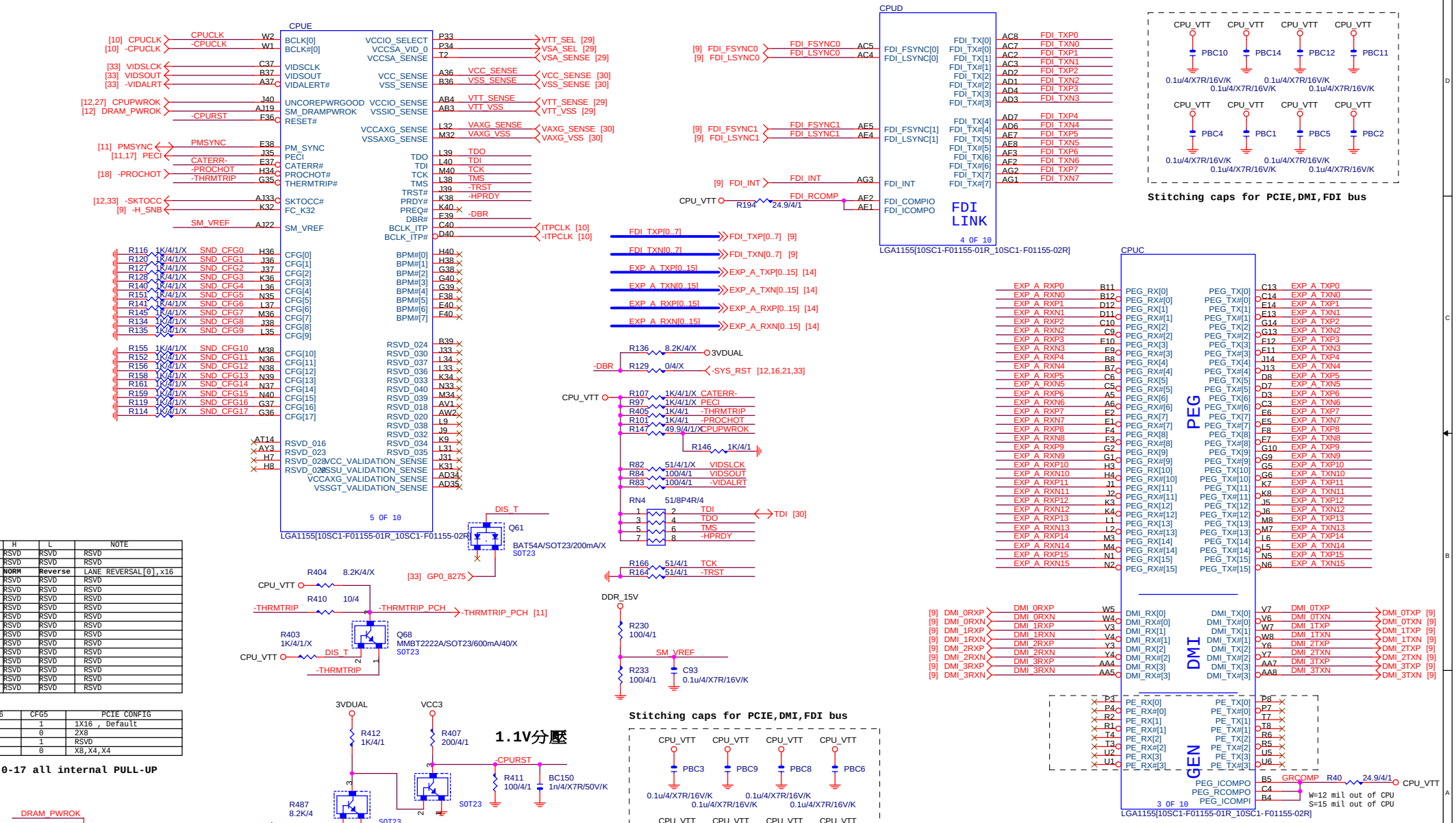

CFG	H	L	NOTE
0	RSVD	RSVD	RSVD
1	RSVD	RSVD	RSVD
2	**NORM**	**Reverse**	LANE REVERSAL[0],x16
3	RSVD	RSVD	RSVD
4	RSVD	RSVD	RSVD
7	RSVD	RSVD	RSVD
8	RSVD	RSVD	RSVD
9	RSVD	RSVD	RSVD
10	RSVD	RSVD	RSVD
11	RSVD	RSVD	RSVD
12	RSVD	RSVD	RSVD
13	RSVD	RSVD	RSVD
14	RSVD	RSVD	RSVD
15	RSVD	RSVD	RSVD
16	RSVD	RSVD	RSVD
17	RSVD	RSVD	RSVD

CFG6	CFG5	PCIE CONFIG
1	1	1X16 , Default
1	0	2X8
0	1	RSVD
0	0	X8,X4,X4

CFG 0-17 all internal PULL-UP

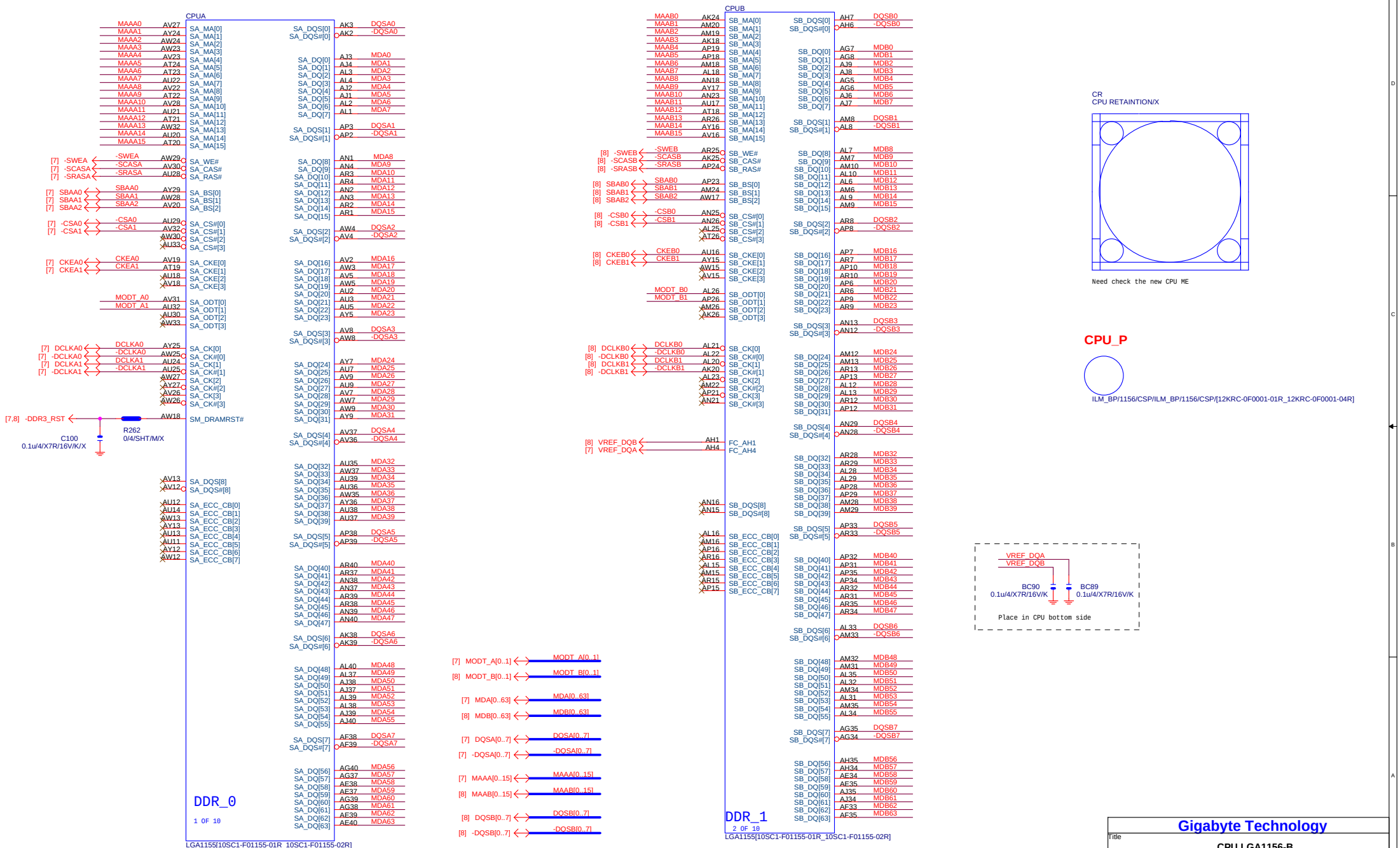
CPUA
DDR_0
1 OF 10
LGA1155[10SC1-F01155-01R_10SC1-F01155-02R]
CPUB
DDR_1
2 OF 10
LGA1155[10SC1-F01155-01R_10SC1-F01155-02R]
CR
CPU RETAINTION/X
Need check the new CPU ME
CPU_P
ILM_BP/1156/CSP/ILM_BP/1156/CSP/[12KRC-0F0001-01R_12KRC-0F0001-04R]
VREF_DQA
VREF_DQB
BC90
0.1u/4/X7R/16V/K
BC89
0.1u/4/X7R/16V/K
Place in CPU bottom side
R262
0/4/SHT/M/X
C100
0.1u/4/X7R/16V/K/X
Gigabyte Technology
Title
CPU LGA1156-B
Size
Custom
Document Number
GA-H67MA-D2H-B3
Rev
1.1
Date: Wednesday, February 09, 2011
Sheet 5 of 33

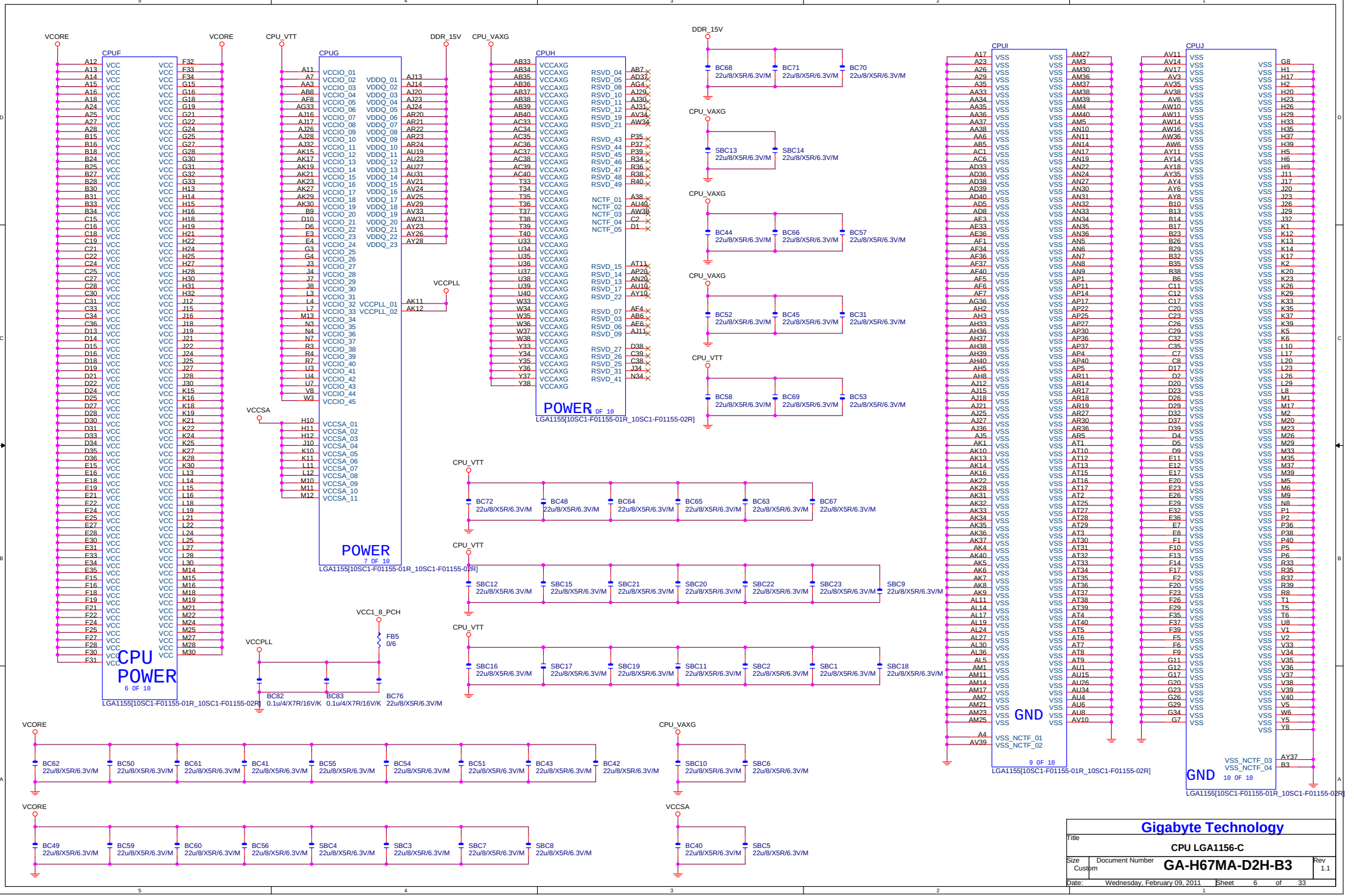

Gigabyte Technology			
Title	CPU LGA1156-C		
Size Custom	Document Number GA-H67MA-D2H-B3		Rev 1.1
Date: Wednesday, February 09, 2011	Sheet 6 of 33		

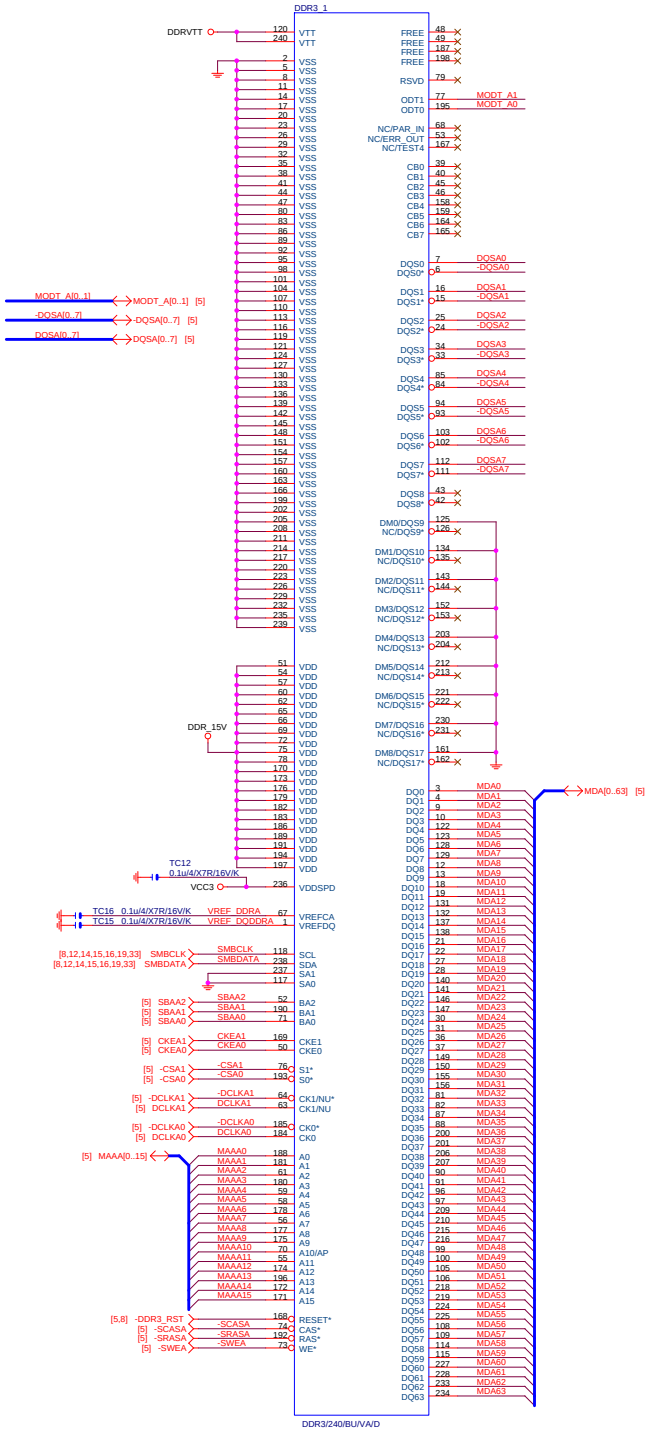

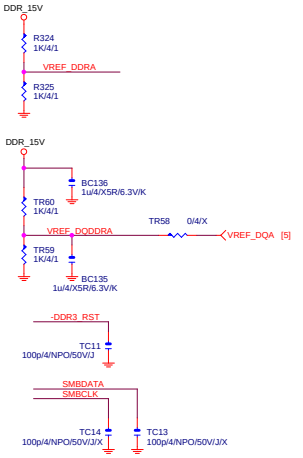

DDR15V Decouple

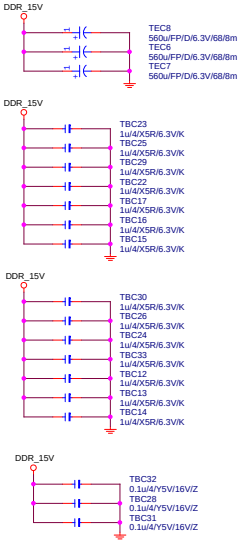

DDRVTT Decouple

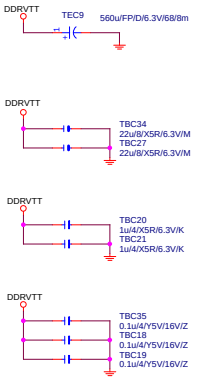

Gigabyte Technology			
Title	DDRIII CHANNEL A		
Size Custom	Document Number	GA-H67MA-D2H-B3	Rev 1.1
Date:	Sheet 7 of 33		

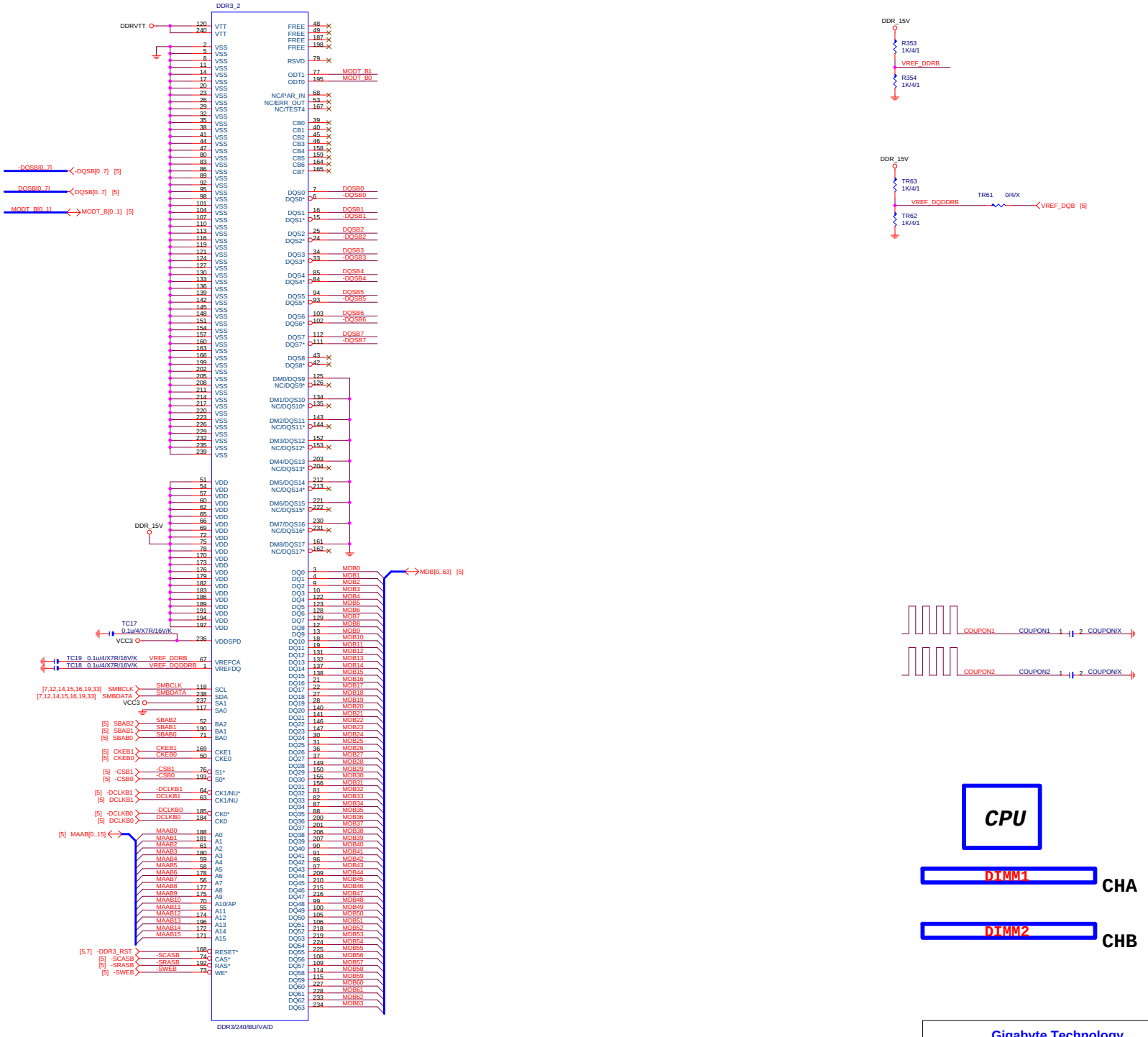

Gigabyte Technology			
Title	DDRIII CHANNEL B		
Size Custom	Document Number	GA-H67MA-D2H-B3	Rev 1.1
Date:		Sheet 8 of 33	

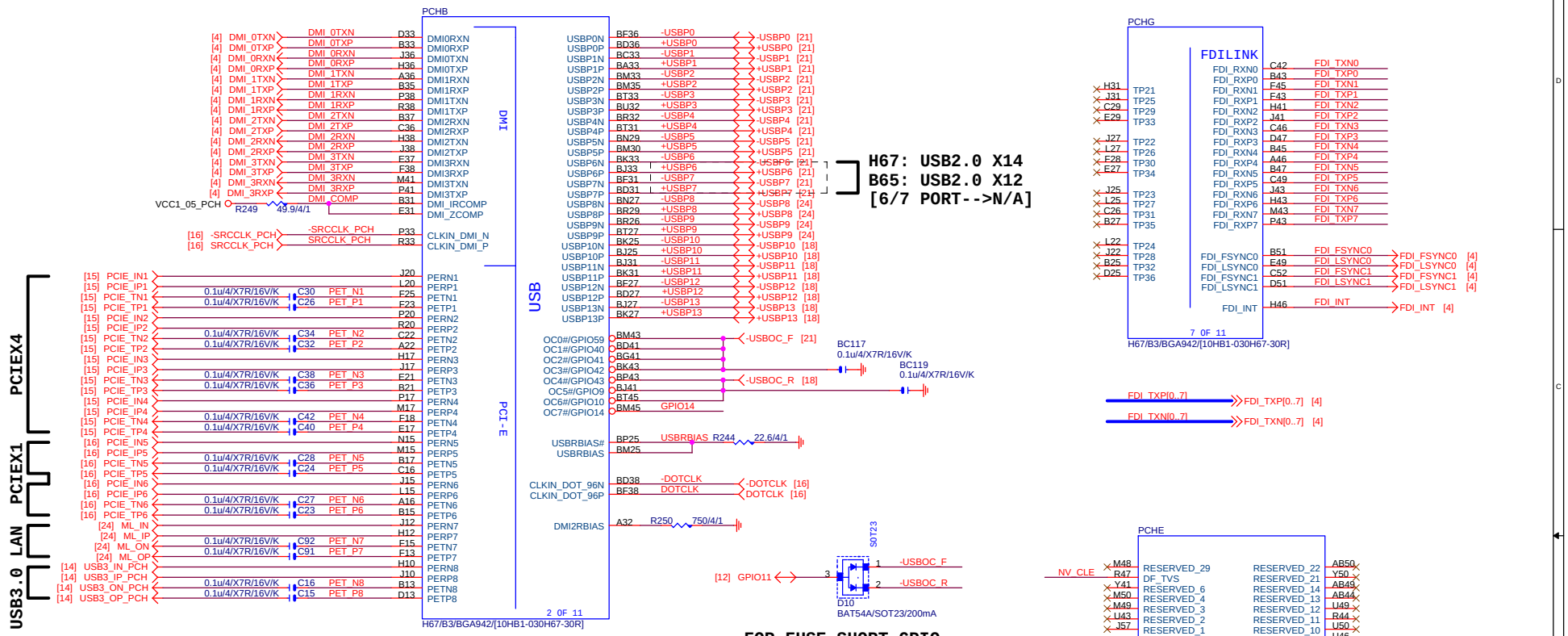

USB OC# Configure	
OC0#	USB0,1(F_USB1)
OC1#	USB2,3(F_USB2)
OC2#	USB4,5(F_USB3)
OC3#	USB6,7(F_USB4)
OC4#	USB8,9(CO-LAYOUT)
OC5#	USB10~11(USB_ESATA)
OC6#	USB12~13(KB_USB)
OC7#	GPIO14

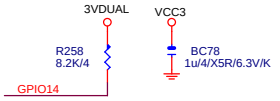

NEW FOOTPRINT:BGAHSINK_PCH_HS

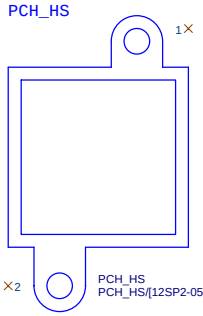

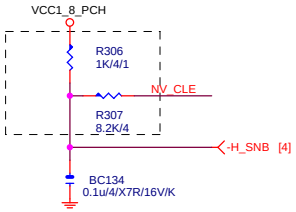

DMI /FDI termination voltage

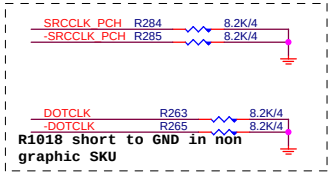

R1018 short to GND in non graphic SKU

Gigabyte Technology			
Title	PCH FDI,DMI,USB ,PCIE,NVRAM		
Size Custom	Document Number GA-H67MA-D2H-B3		Rev 1.1
Date: Wednesday, February 09, 2011	Sheet 9 of 33		

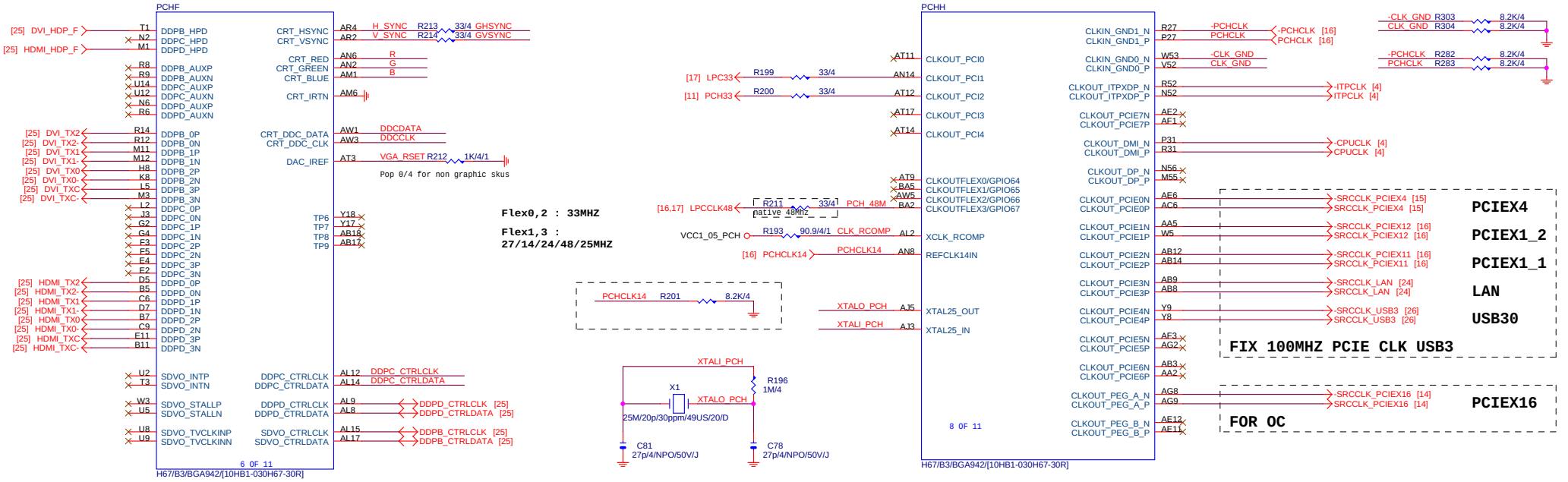

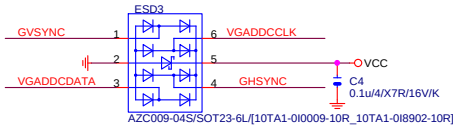

SSOP6_ESD

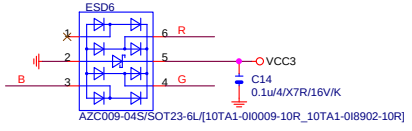

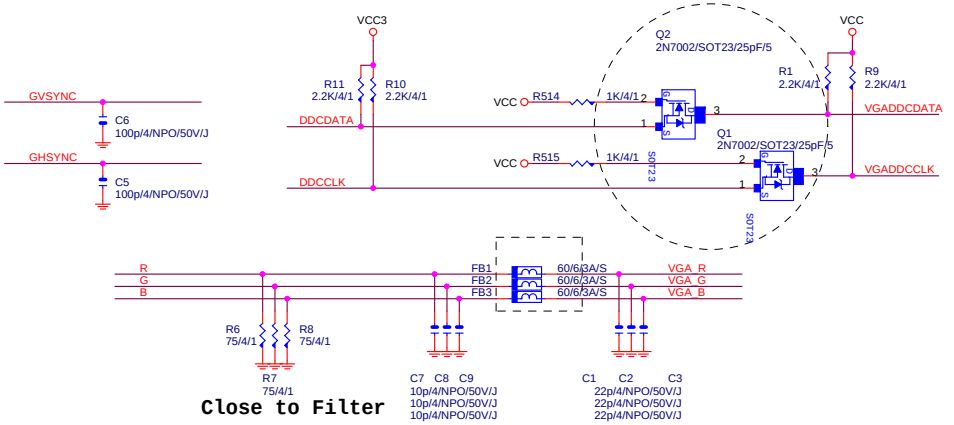

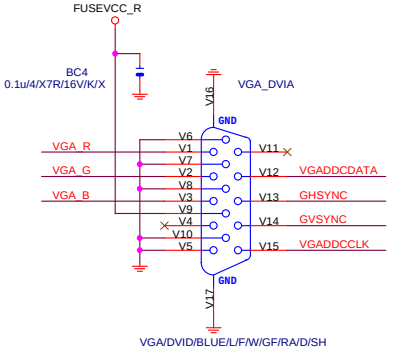

Gigabyte Technology			
Title	PCH DISPLAY ,CLK BUFFER		
Size Custom	Document Number **GA-H67MA-D2H-B3**		Rev 1.1
Date: Wednesday, February 09, 2011	Sheet 10 of 33		

B65 SATA3.0 ONLY PORT1

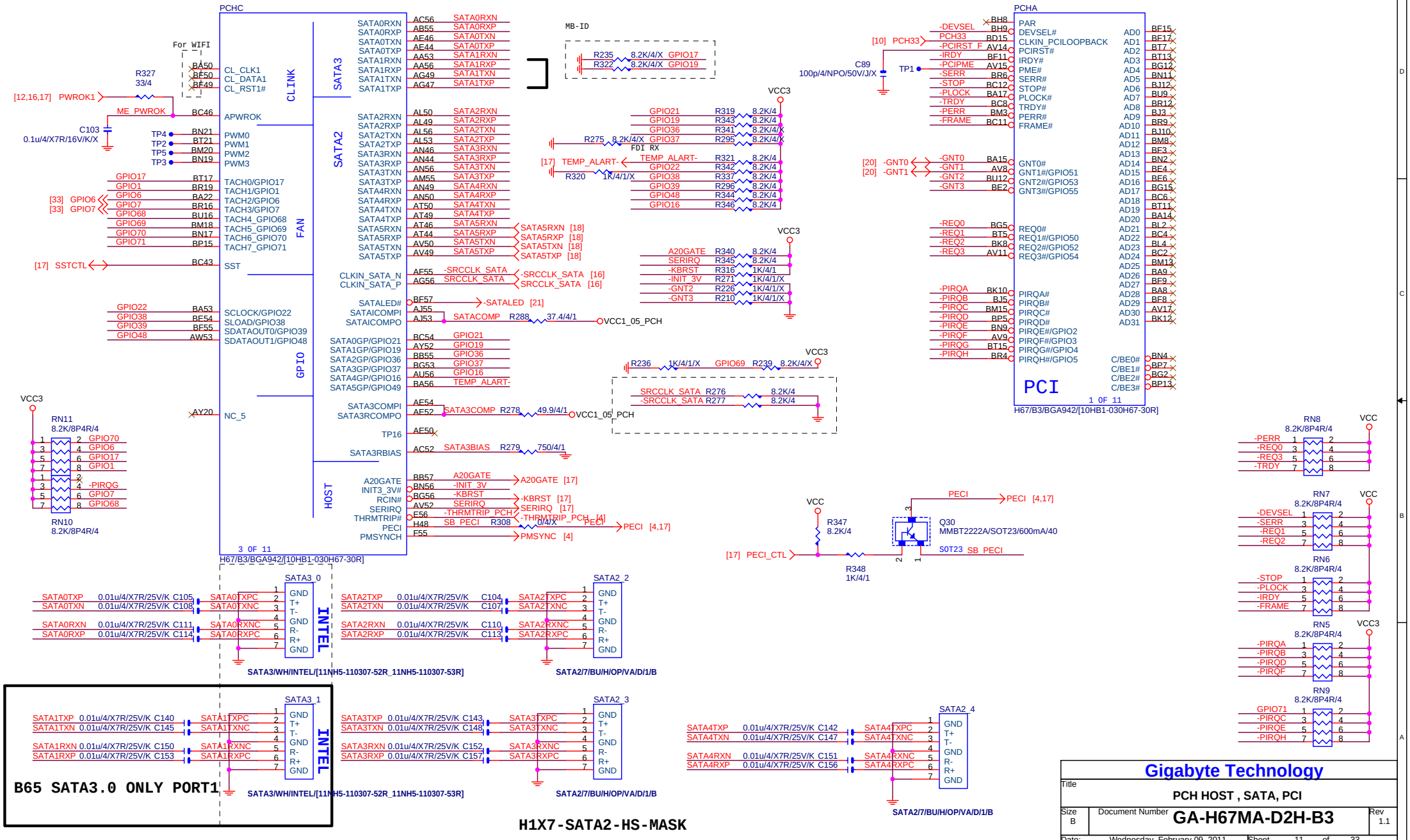

H1X7-SATA2-HS-MASK

Title	PCH HOST , SATA, PCI
Size B	Document Number GA-H67MA-D2H-B3 Rev 1.1
Date: Wednesday, February 09, 2011	Sheet 11 of 33

Gigabyte Technology

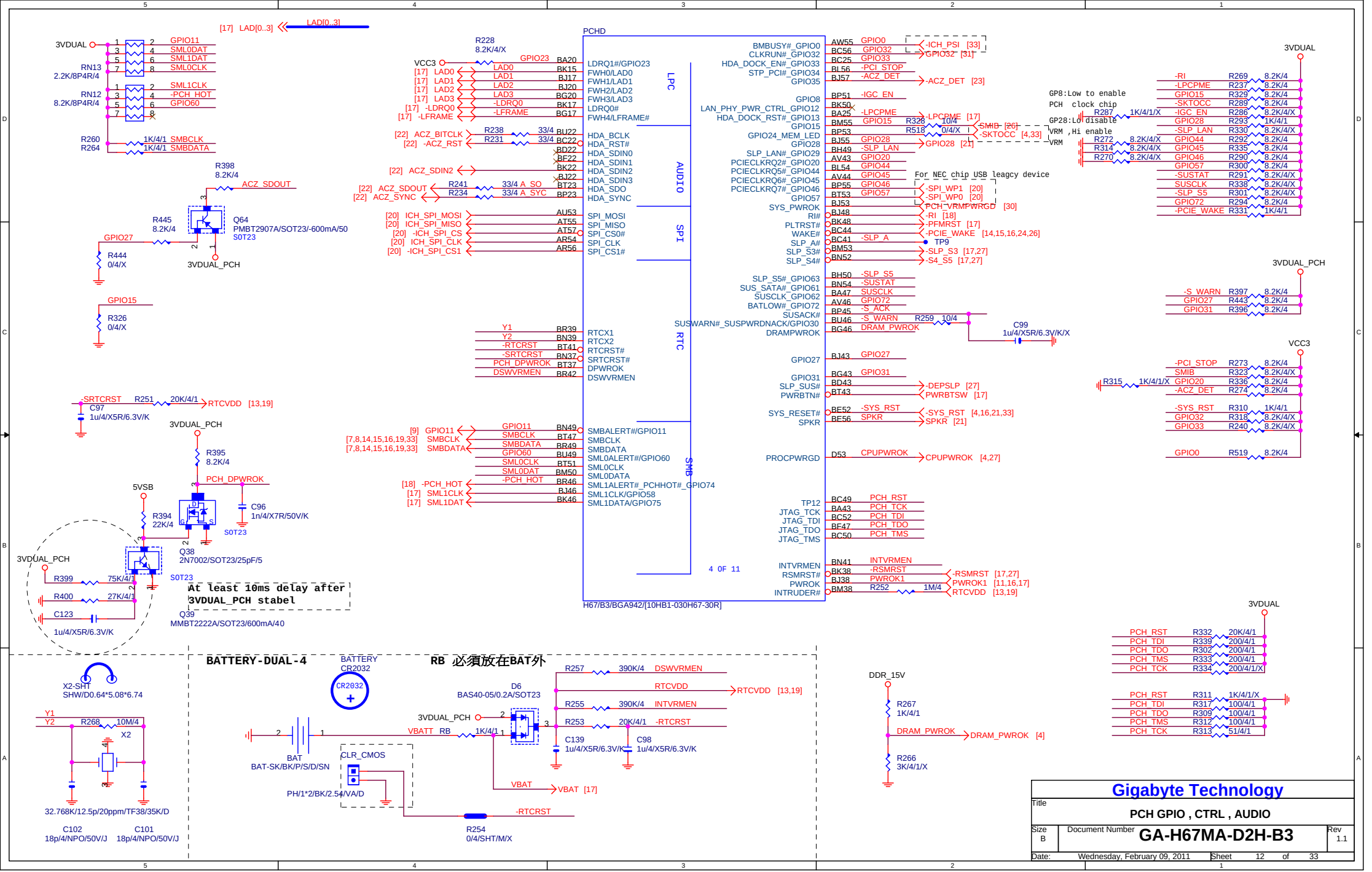

Title	PCH GPIO , CTRL , AUDIO
Size	B
Document Number	GA-H67MA-D2H-B3
Rev	1.1
Date:	Wednesday, February 09, 2011
Sheet	12 of 33

Gigabyte Technology

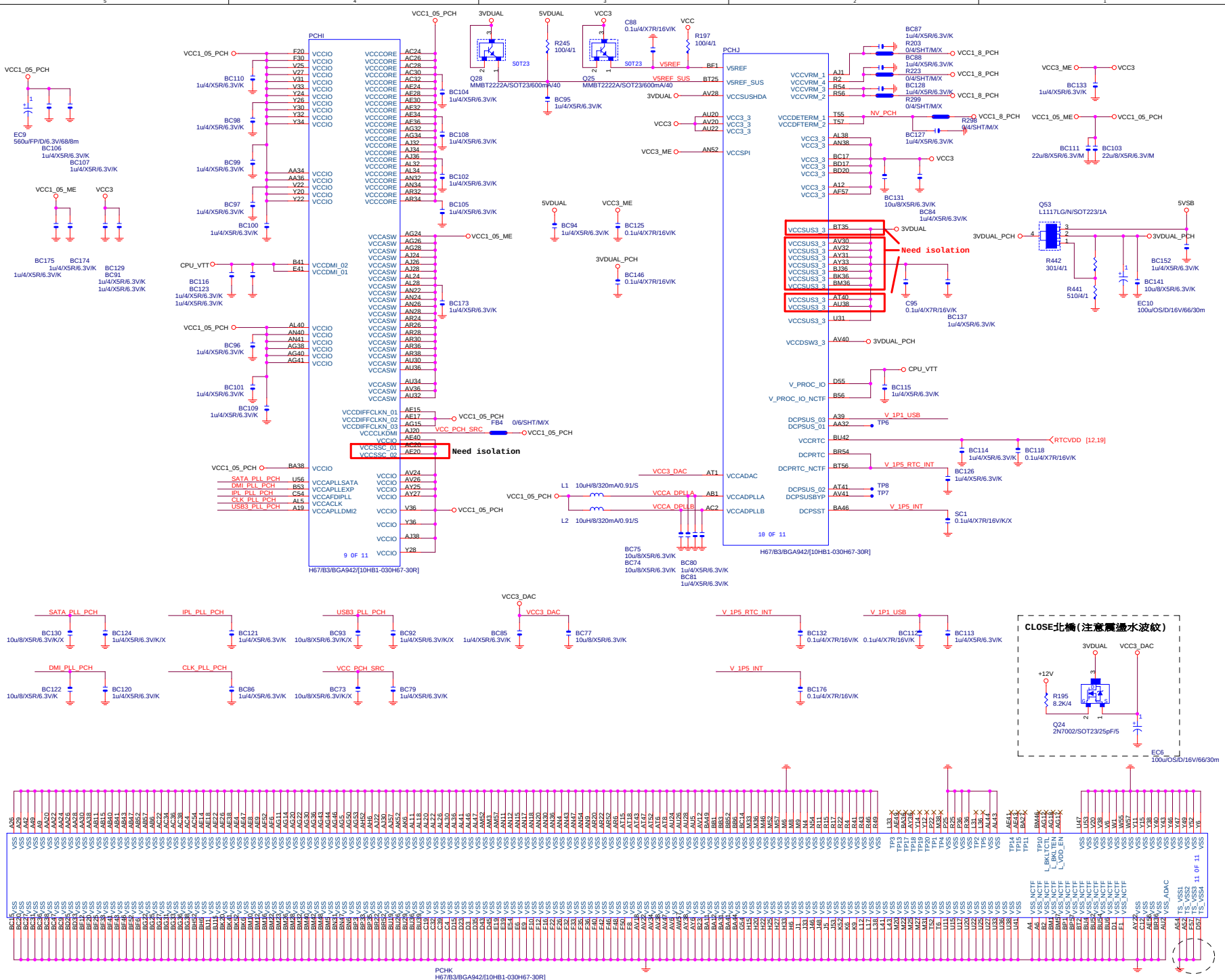

Gigabyte Technology

Title	PCH PWR ,GND
Size Custom	Document Number GA-H67MA-D2H-B3
Rev	1.1
Date: Wednesday, February 09, 2011	Sheet 13 of 33

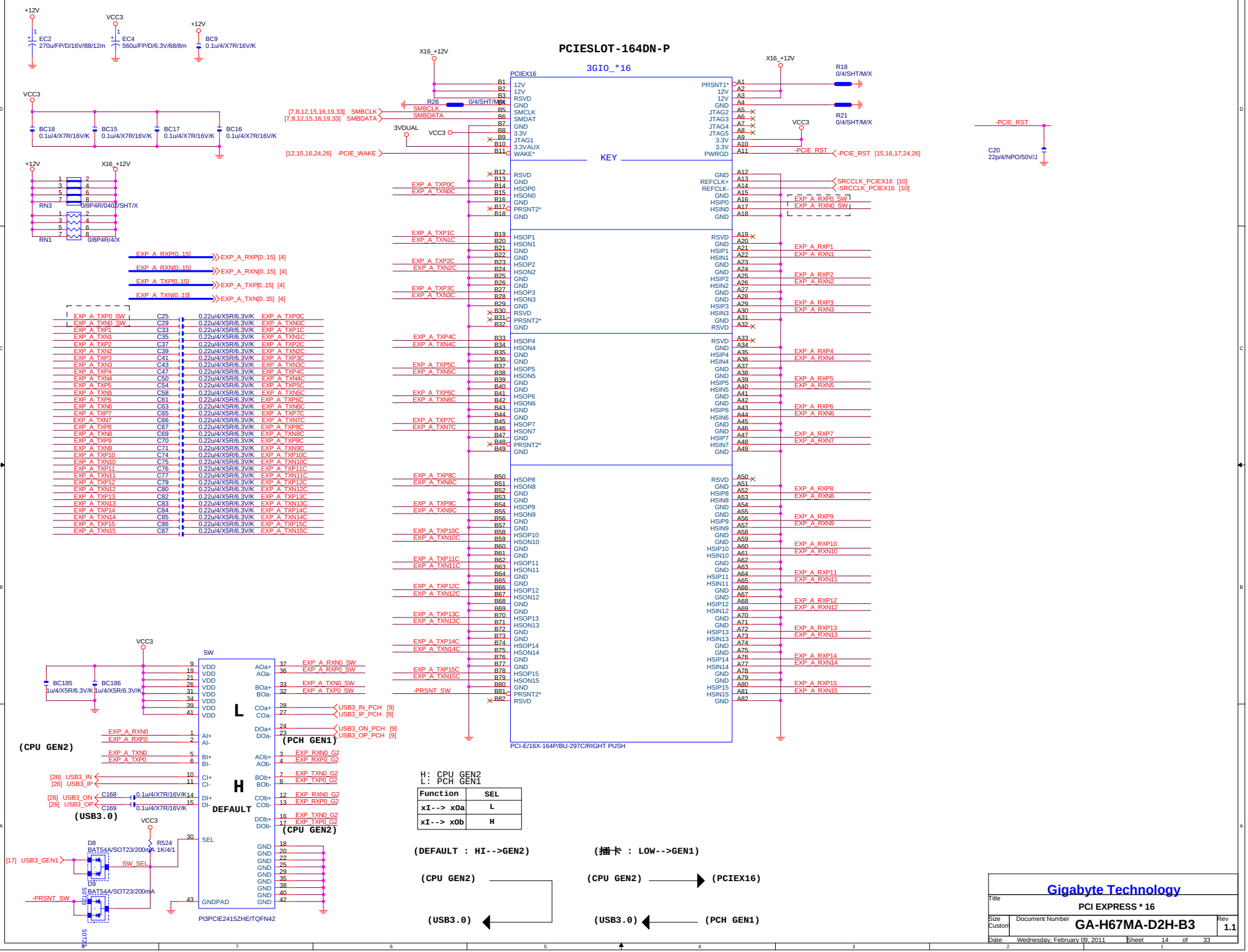

Function	SEL
xI--> xOa	L
xI--> xOb	H

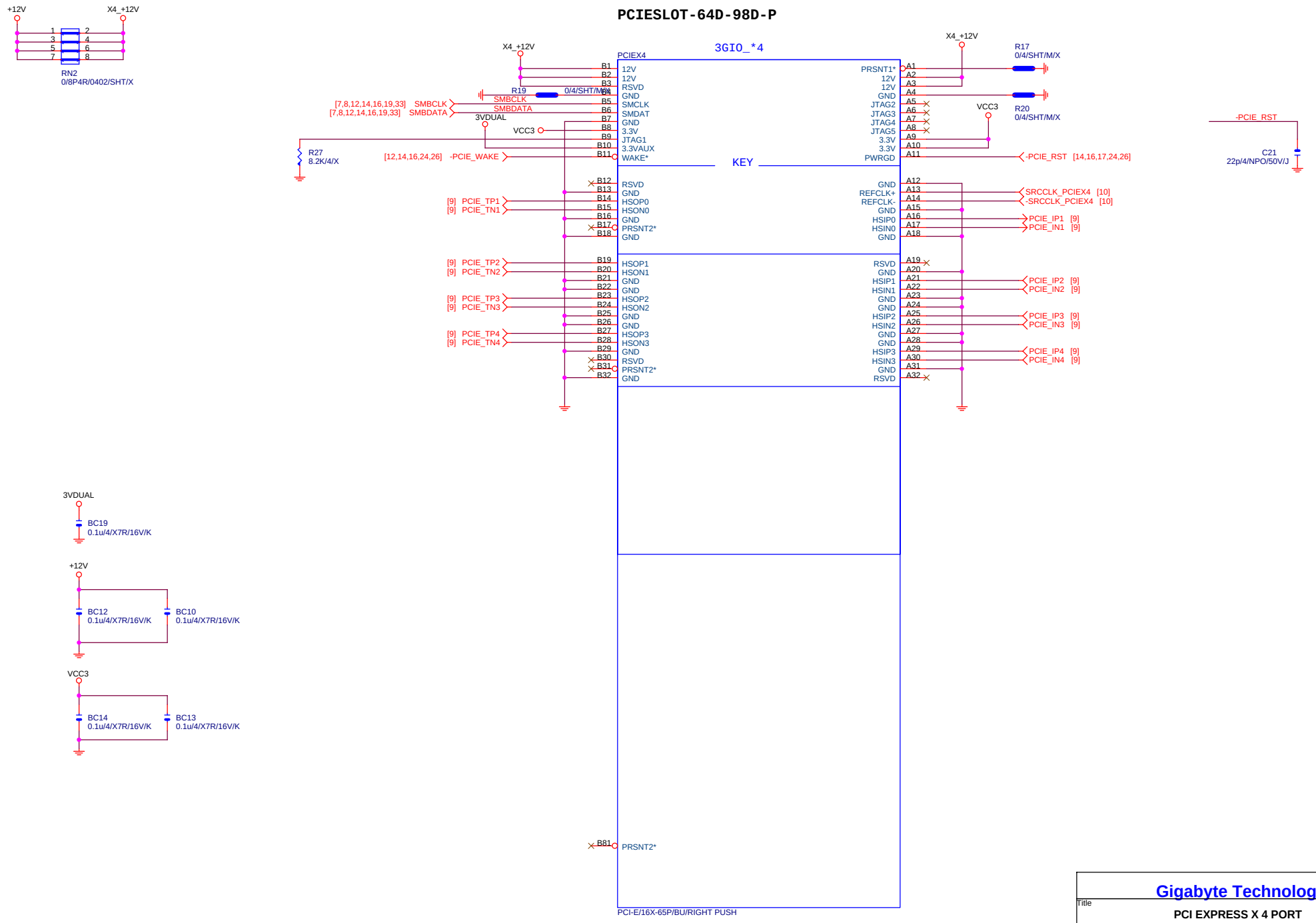

Gigabyte Technology

Title: PCI EXPRESS X 4 PORT

Size: Custom | Document Number: GA-H67MA-D2H-B3 | Rev: 1.1

Date: Wednesday, February 09, 2011 | Sheet 15 of 33

PCIE*1

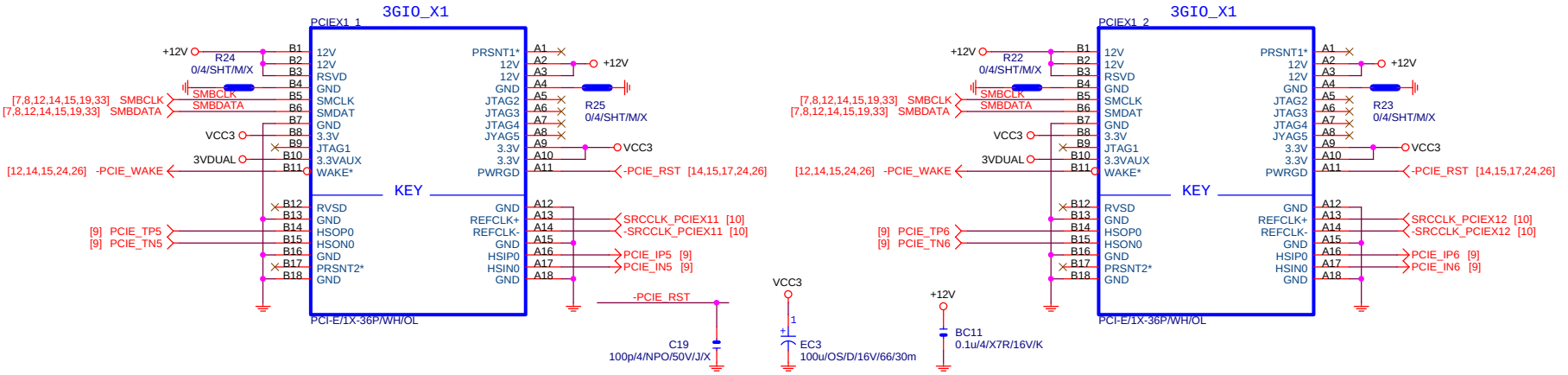

CLK GEN

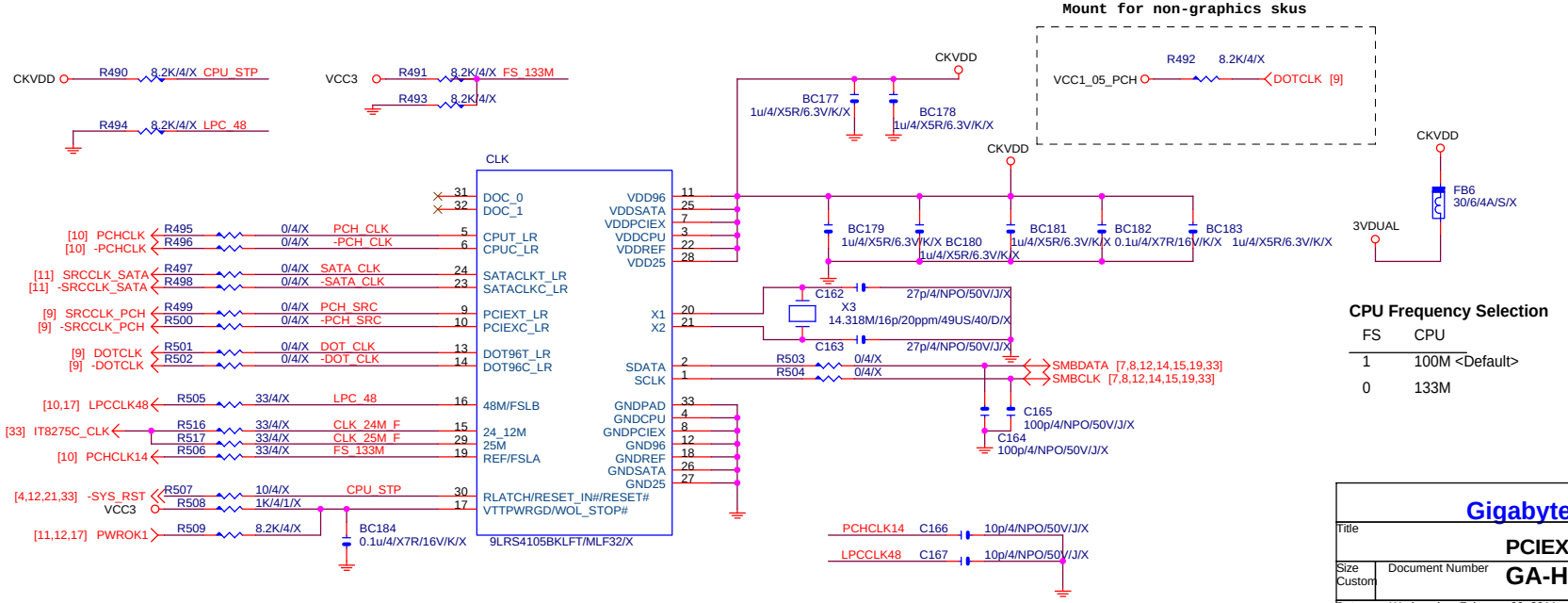

CPU Frequency Selection

FS	CPU
1	100M <Default>
0	133M

Gigabyte Technology			
Title	PCIEX1,X2,CLK GEN		
Size Custom	Document Number GA-H67MA-D2H-B3		Rev 1.1
Date: Wednesday, February 09, 2011	Sheet 16 of 33		

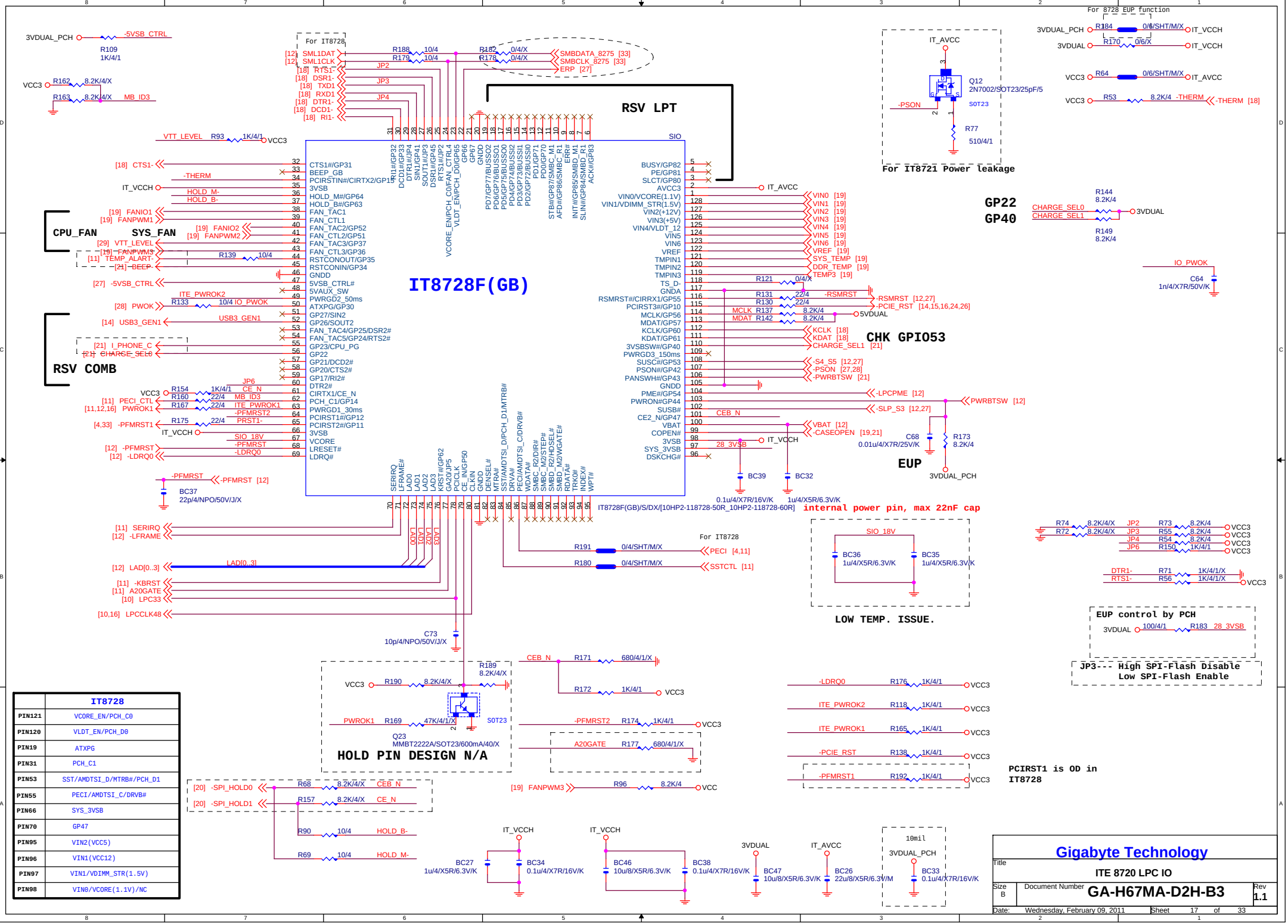

	IT8728
PIN121	VCORE_EN/PCH_C0
PIN120	VLDT_EN/PCH_D0
PIN19	ATXPG
PIN31	PCH_C1
PIN53	SST/AMDTSI_D/MTRB#/PCH_D1
PIN55	PECI/AMDTSI_C/DRVB#
PIN66	SYS_3VSB
PIN70	GP47
PIN95	VIN2(VCC5)
PIN96	VIN1(VCC12)
PIN97	VIN1/VDIMM_STR(1.5V)
PIN98	VIN0/VCORE(1.1V)/NC

Gigabyte Technology

Title: ITE 8720 LPC IO

Size: B | Document Number: GA-H67MA-D2H-B3 | Rev: 1.1

Date: Wednesday, February 09, 2011 | Sheet 17 of 33

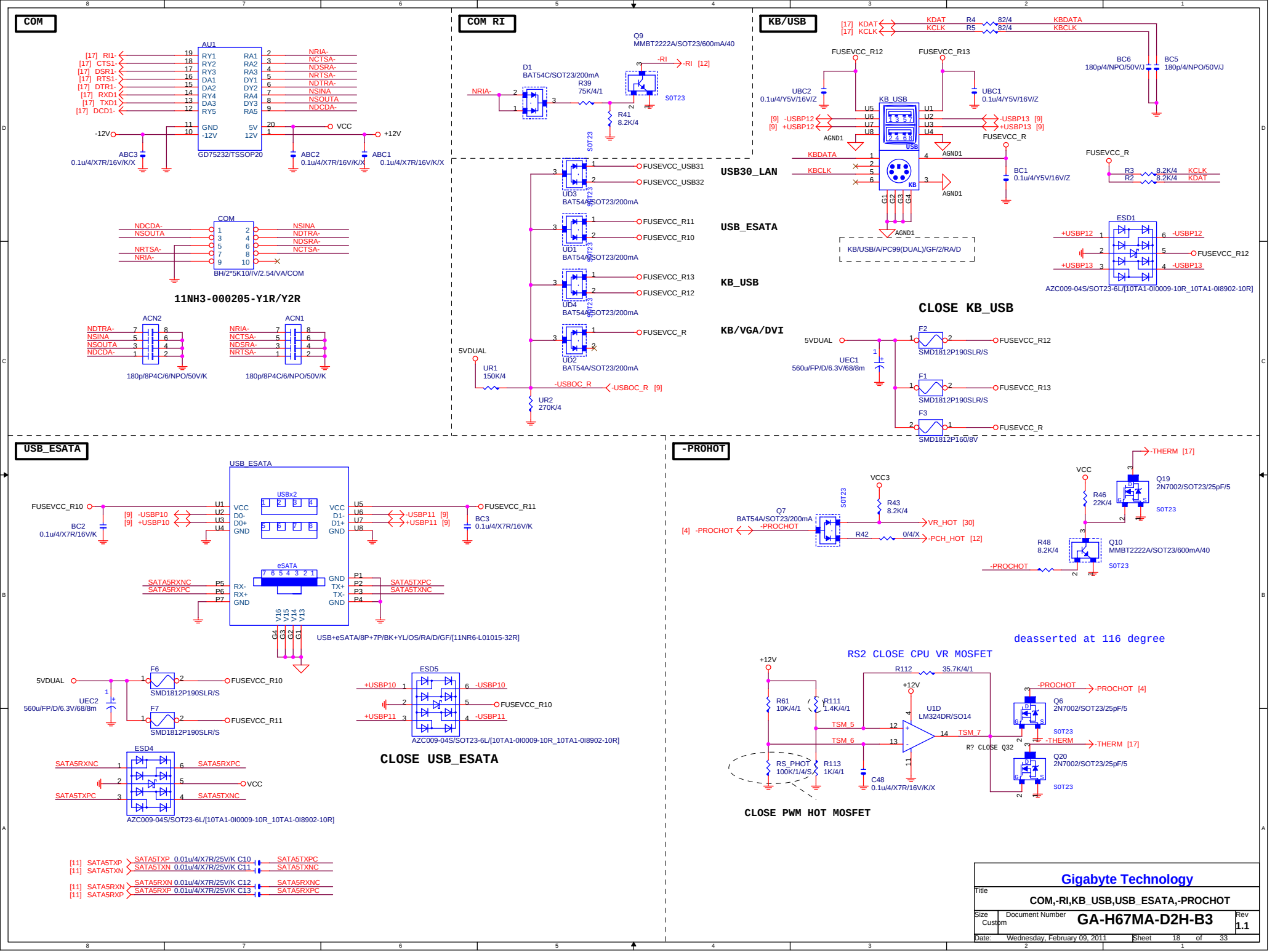
COM
AU1
GD75232/TSSOP20
[17] RI1-
[17] CTS1-
[17] DSR1-
[17] RTS1-
[17] DTR1-
[17] RXD1
[17] TXD1
[17] DCD1-
NRIA-
NCTSA-
NDSRA-
NRTSA-
NDTRA-
NSINA
NSOUTA
NDCDA-
-12V
VCC
+12V
ABC3 0.1u/4/X7R/16V/K/X
ABC2 0.1u/4/X7R/16V/K/X
ABC1 0.1u/4/X7R/16V/K/X
COM
BH/2*5K10/IV/2.54/VA/COM
11NH3-000205-Y1R/Y2R
ACN2
ACN1
180p/8P4C/6/NPO/50V/K
COM RI
Q9
MMBT2222A/SOT23/600mA/40
-RI
-RI [12]
D1
BAT54C/SOT23/200mA
R39
75K/4/1
R41
8.2K/4
S0T23
USB30_LAN
USB_ESATA
KB_USB
KB/VGA/DVI
FUSEVCC_USB31
FUSEVCC_USB32
UD3
BAT54A/SOT23/200mA
FUSEVCC_R11
FUSEVCC_R10
UD1
FUSEVCC_R13
FUSEVCC_R12
UD4
FUSEVCC_R
UD2
5VDUAL
UR1
150K/4
UR2
270K/4
-USBOC_R
-USBOC_R [9]
KB/USB
[17] KDAT
[17] KCLK
KDAT
KCLK
R4
R5
82/4
KBDATA
KBCLK
FUSEVCC_R12
FUSEVCC_R13
UBC2
0.1u/4/Y5V/16V/Z
UBC1
0.1u/4/Y5V/16V/Z
BC6
180p/4/NPO/50V/J
BC5
180p/4/NPO/50V/J
KB_USB
[9] -USBP12
[9] +USBP12
-USBP13 [9]
+USBP13 [9]
AGND1
FUSEVCC_R
BC1
0.1u/4/Y5V/16V/Z
R3
R2
8.2K/4
ESD1
+USBP12
-USBP12
+USBP13
-USBP13
AZC009-04S/SOT23-6L/[10TA1-0I0009-10R_10TA1-0I8902-10R]
KB/USB/A/PC99(DUAL)/GF/2/RA/D
CLOSE KB_USB
5VDUAL
UEC1
560u/FP/D/6.3V/68/8m
F2
SMD1812P190SLR/S
F1
F3
SMD1812P160/8V
USB_ESATA
USB_ESATA
USBx2
eSATA
FUSEVCC_R10
FUSEVCC_R11
BC2
0.1u/4/X7R/16V/K
BC3
0.1u/4/X7R/16V/K
[9] -USBP10
[9] +USBP10
-USBP11 [9]
+USBP11 [9]
SATA5RXNC
SATA5RXPC
SATA5TXPC
SATA5TXNC
USB+eSATA/8P+7P/BK+YL/OS/RA/D/GF/[11NR6-L01015-32R]
F6
F7
ESD5
ESD4
AZC009-04S/SOT23-6L/[10TA1-0I0009-10R_10TA1-0I8902-10R]
CLOSE USB_ESATA
[11] SATA5TXP
[11] SATA5TXN
SATA5TXP 0.01u/4/X7R/25V/K C10
SATA5TXN 0.01u/4/X7R/25V/K C11
[11] SATA5RXN
[11] SATA5RXP
SATA5RXN 0.01u/4/X7R/25V/K C12
SATA5RXP 0.01u/4/X7R/25V/K C13
-PROHOT
VCC3
Q7
BAT54A/SOT23/200mA
[4] -PROHOT
R43
8.2K/4
VR_HOT [30]
R42
0/4/X
-PCH_HOT [12]
-THERM [17]
VCC
R46
22K/4
Q19
2N7002/SOT23/25pF/5
R48
8.2K/4
Q10
MMBT2222A/SOT23/600mA/40
deasserted at 116 degree
RS2 CLOSE CPU VR MOSFET
+12V
R112
35.7K/4/1
R61
10K/4/1
R111
1.4K/4/1
U1D
LM324DR/SO14
TSM_5
TSM_6
TSM_7
RS_PHOT
100K/1/4/S
R113
1K/4/1
C48
0.1u/4/X7R/16V/K/X
-PROHOT [4]
Q6
2N7002/SOT23/25pF/5
-THERM
R? CLOSE Q32
Q20
2N7002/SOT23/25pF/5
CLOSE PWM HOT MOSFET
Gigabyte Technology
Title
COM,-RI,KB_USB,USB_ESATA,-PROCHOT
Size
Custom
Document Number
GA-H67MA-D2H-B3
Rev
1.1
Date: Wednesday, February 09, 2011
Sheet 18 of 33

TEMP H/W MONITOR

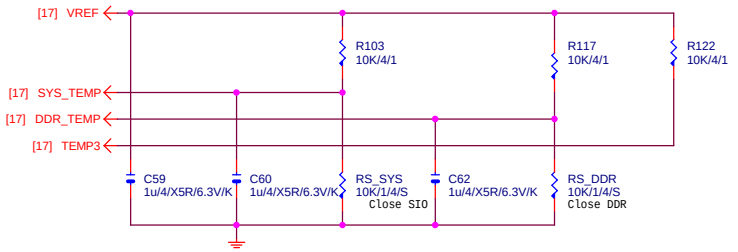

CASE OPEN

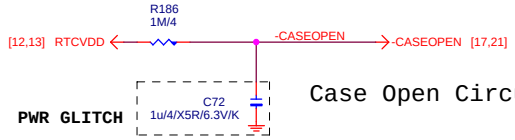

Case Open Circuits

VOLTAGE-- H/W MONITOR

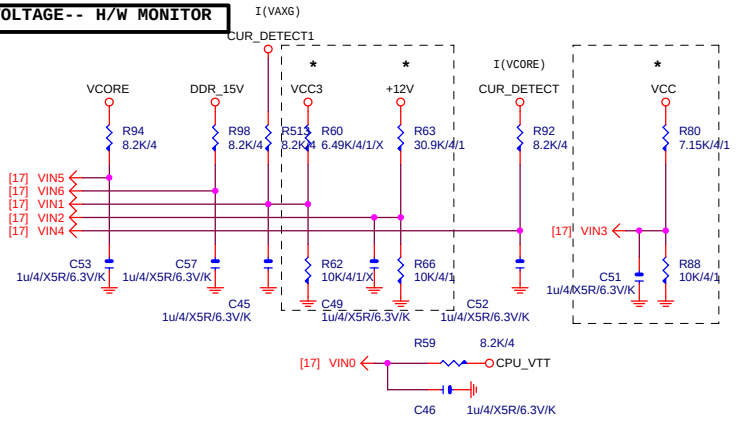

CPU SMART FAN

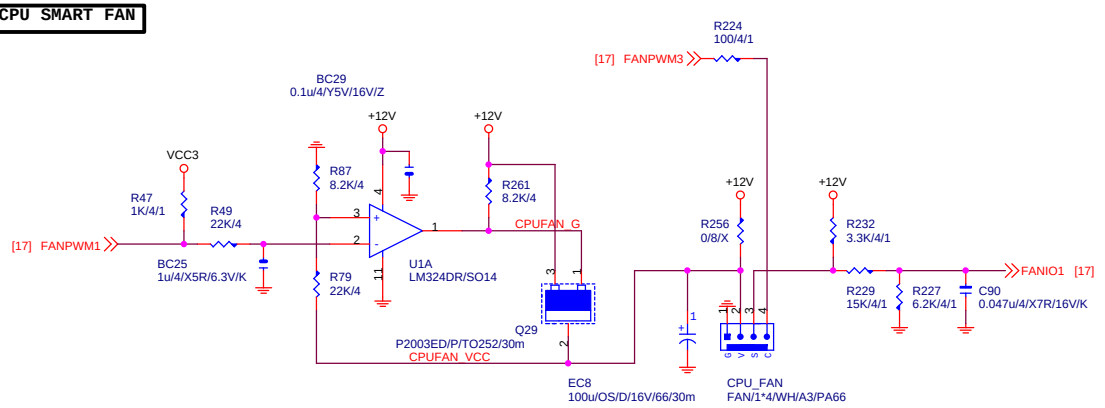

SYS SMART FAN

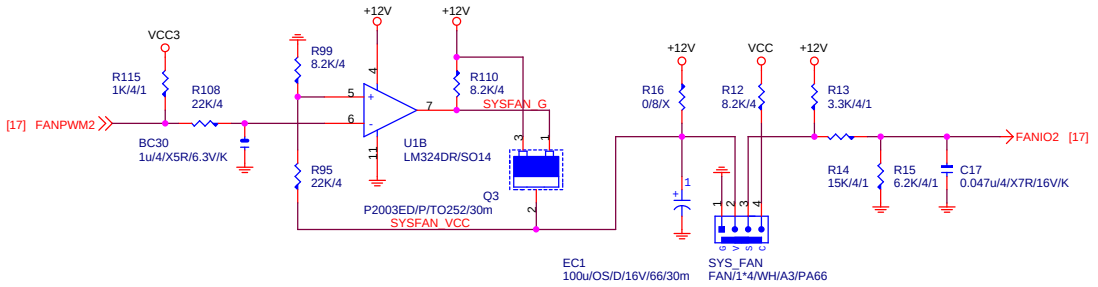

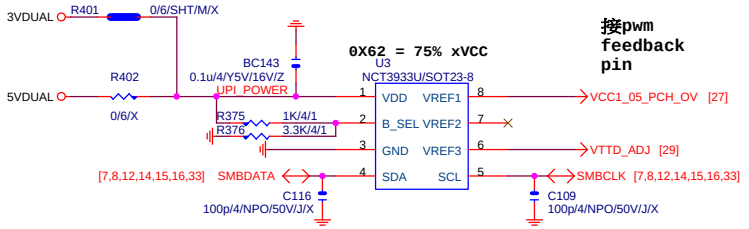

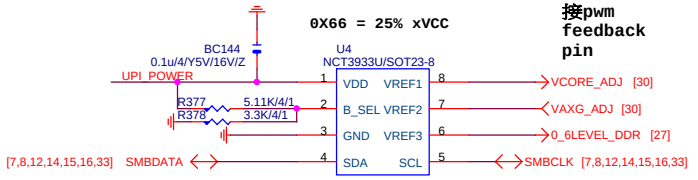

Gigabyte Technology			
Title	HWM,FAN CTRL,OV		
Size Custom	Document Number GA-H67MA-D2H-B3		Rev 1.1
Date: Wednesday, February 09, 2011	Sheet 19 of 33		

DUAL BIOS

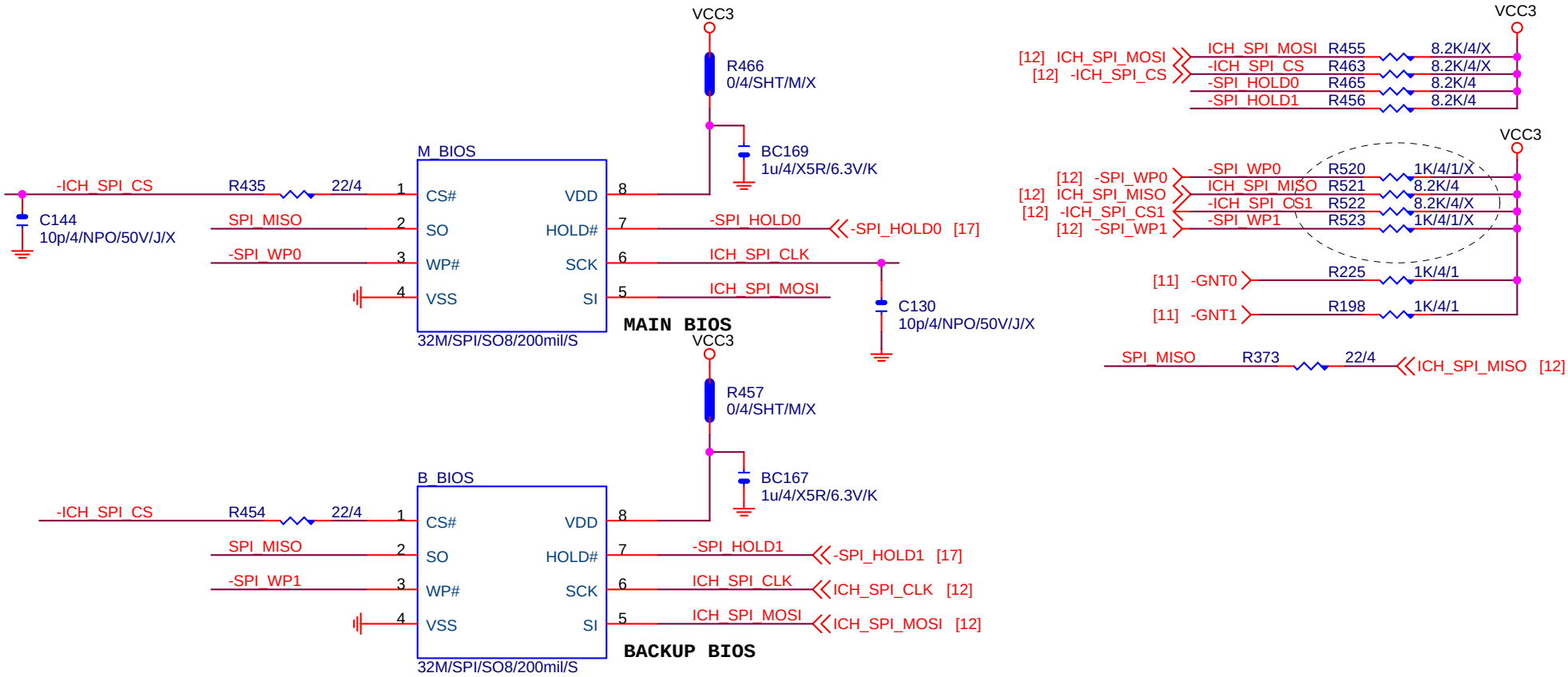

BOOT DEVICE	GNT1	GNT0
LPC	0	0
PCI	0	1
SPI	1	1

1 means floating
0 means PD 1K

Gigabyte Technology		
Title: DUAL BIOS		
Size: A	Document Number: GA-H67MA-D2H-B3	Rev: 1.1
Date: Wednesday, February 09, 2011	Sheet 20 of 33	

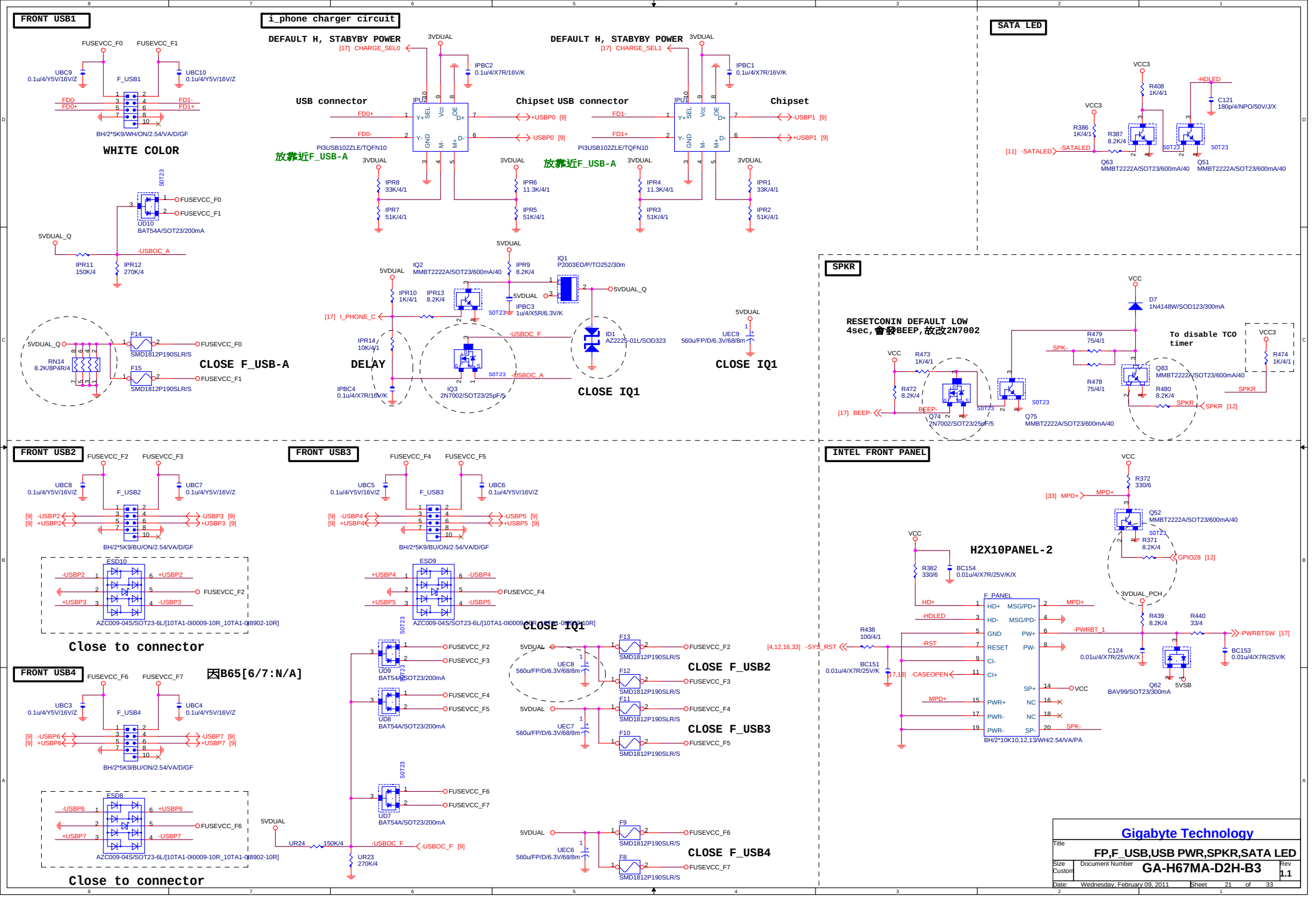
FRONT USB1
FUSEVCC_F0
FUSEVCC_F1
UBC9 0.1u/4/Y5V/16V/Z
F_USB1
UBC10 0.1u/4/Y5V/16V/Z
FD0-
FD0+
FD1-
FD1+
BH/2*5K9/WH/ON/2.54/VA/D/GF
WHITE COLOR
UD10
BAT54A/SOT23/200mA
5VDUAL_Q
-USBOC_A
IPR11 150K/4
IPR12 270K/4
F14
F15
SMD1812P190SLR/S
RN14 8.2K/8P4R/4
CLOSE F_USB-A
i_phone charger circuit
DEFAULT H, STABYBY POWER
[17] CHARGE_SEL0
3VDUAL
IPBC2 0.1u/4/X7R/16V/K
USB connector
IPU10
Chipset USB connector
PI3USB102ZLE/TQFN10
+USBP0 [9]
-USBP0 [9]
放靠近F_USB-A
IPR8 33K/4/1
IPR7 51K/4/1
IPR6 11.3K/4/1
IPR5 51K/4/1
DEFAULT H, STABYBY POWER
[17] CHARGE_SEL1
IPBC1 0.1u/4/X7R/16V/K
Chipset
-USBP1 [9]
+USBP1 [9]
IPR4 11.3K/4/1
IPR3 51K/4/1
IPR1 33K/4/1
IPR2 51K/4/1
IQ2 MMBT2222A/SOT23/600mA/40
IPR9 8.2K/4
IQ1 P2003ED/P/TO252/30m
IPR10 1K/4/1
IPR13 8.2K/4
IPBC3 1u/4X5R/6.3V/K
[17] I_PHONE_C
IPR14 10K/4/1
-USBOC_F
ID1 AZ2225-01L/SOD323
DELAY
IPBC4 0.1u/4/X7R/16V/K
IQ3 2N7002/SOT23/25pF/5
CLOSE IQ1
UEC9 560u/FP/D/6.3V/68/8m
CLOSE IQ1
SATA LED
VCC3
R408 1K/4/1
-HDLED
C121 180p/4/NPO/50V/J/X
R386 1K/4/1
R387 8.2K/4
[11] -SATALED
Q63 MMBT2222A/SOT23/600mA/40
Q51 MMBT2222A/SOT23/600mA/40
SPKR
RESETCONIN DEFAULT LOW
4sec,會發BEEP,故改2N7002
D7 1N4148W/SOD123/300mA
To disable TCO timer
R479 75/4/1
R478 75/4/1
R473 1K/4/1
R472 8.2K/4
[17] BEEP-
Q74 2N7002/SOT23/25pF/5
Q75 MMBT2222A/SOT23/600mA/40
Q83 MMBT2222A/SOT23/600mA/40
R480 8.2K/4
R474 1K/4/1
SPKR [12]
FRONT USB2
FUSEVCC_F2
FUSEVCC_F3
UBC8 0.1u/4/Y5V/16V/Z
F_USB2
UBC7 0.1u/4/Y5V/16V/Z
-USBP2
+USBP2
-USBP3 [9]
+USBP3 [9]
BH/2*5K9/BU/ON/2.54/VA/D/GF
ESD10
AZC009-04S/SOT23-6L/[10TA1-0I0009-10R_10TA1-0I8902-10R]
Close to connector
FRONT USB3
FUSEVCC_F4
FUSEVCC_F5
UBC5 0.1u/4/Y5V/16V/Z
F_USB3
UBC6 0.1u/4/Y5V/16V/Z
-USBP4
+USBP4
-USBP5 [9]
+USBP5 [9]
ESD9
CLOSE IQ1
UD9 BAT54A/SOT23/200mA
UD8 BAT54A/SOT23/200mA
UD7 BAT54A/SOT23/200mA
F13
F12
F11
F10
F9
F8
SMD1812P190SLR/S
UEC8 560u/FP/D/6.3V/68/8m
UEC7 560u/FP/D/6.3V/68/8m
UEC6 560u/FP/D/6.3V/68/8m
CLOSE F_USB2
CLOSE F_USB3
CLOSE F_USB4
FRONT USB4
因B65[6/7:N/A]
FUSEVCC_F6
FUSEVCC_F7
UBC3 0.1u/4/Y5V/16V/Z
F_USB4
UBC4 0.1u/4/Y5V/16V/Z
-USBP6
+USBP6
-USBP7 [9]
+USBP7 [9]
BH/2*5K9/BU/ON/2.54/VA/D/GF
ESD8
AZC009-04S/SOT23-6L/[10TA1-0I0009-10R_10TA1-0I8902-10R]
Close to connector
UR24 150K/4
UR23 270K/4
-USBOC_F [9]
INTEL FRONT PANEL
R372 330/6
[33] MPD+
Q52 MMBT2222A/SOT23/600mA/40
R371 8.2K/4
GPIO28 [12]
H2X10PANEL-2
R382 330/6
BC154 0.01u/4/X7R/25V/K/X
F_PANEL
HD+
HD-
GND
RESET
CI-
CI+
PWR+
PWR-
MSG/PD+
MSG/PD-
PW+
PW-
SP+
NC
SP-
-HDLED
-RST
-CASEOPEN
MPD+
SPK-
[4,12,16,33] -SYS_RST
R438 100/4/1
BC151 0.01u/4/X7R/25V/K
[17,19]
3VDUAL_PCH
R439 8.2K/4
R440 33/4
-PWRBT_1
-PWRBTSW [17]
C124 0.01u/4/X7R/25V/K/X
BC153 0.01u/4/X7R/25V/K
Q62 BAV99/SOT23/300mA
5VSB
BH/2*10K10,12,13/WH/2.54/VA/PA
Gigabyte Technology
Title
FP,F_USB,USB PWR,SPKR,SATA LED
Size Custom
Document Number
GA-H67MA-D2H-B3
Rev 1.1
Date: Wednesday, February 09, 2011
Sheet 21 of 33

AZALIA CODEC

ALC892/ALC889A/ALC888Vx/ALC888B Colay

	ALC888B	ALC888 -VA	ALC889A	ALC888 -VD	ALC892
CR59	X	O	O	O	O
CR53,58	X	X	O	X	X
CR56	O	O	O	O	X
CR63	X	X	X	X	O
CR34	20K/1%	20K/1%	20K/0.1%	20K/1%	20K/1%

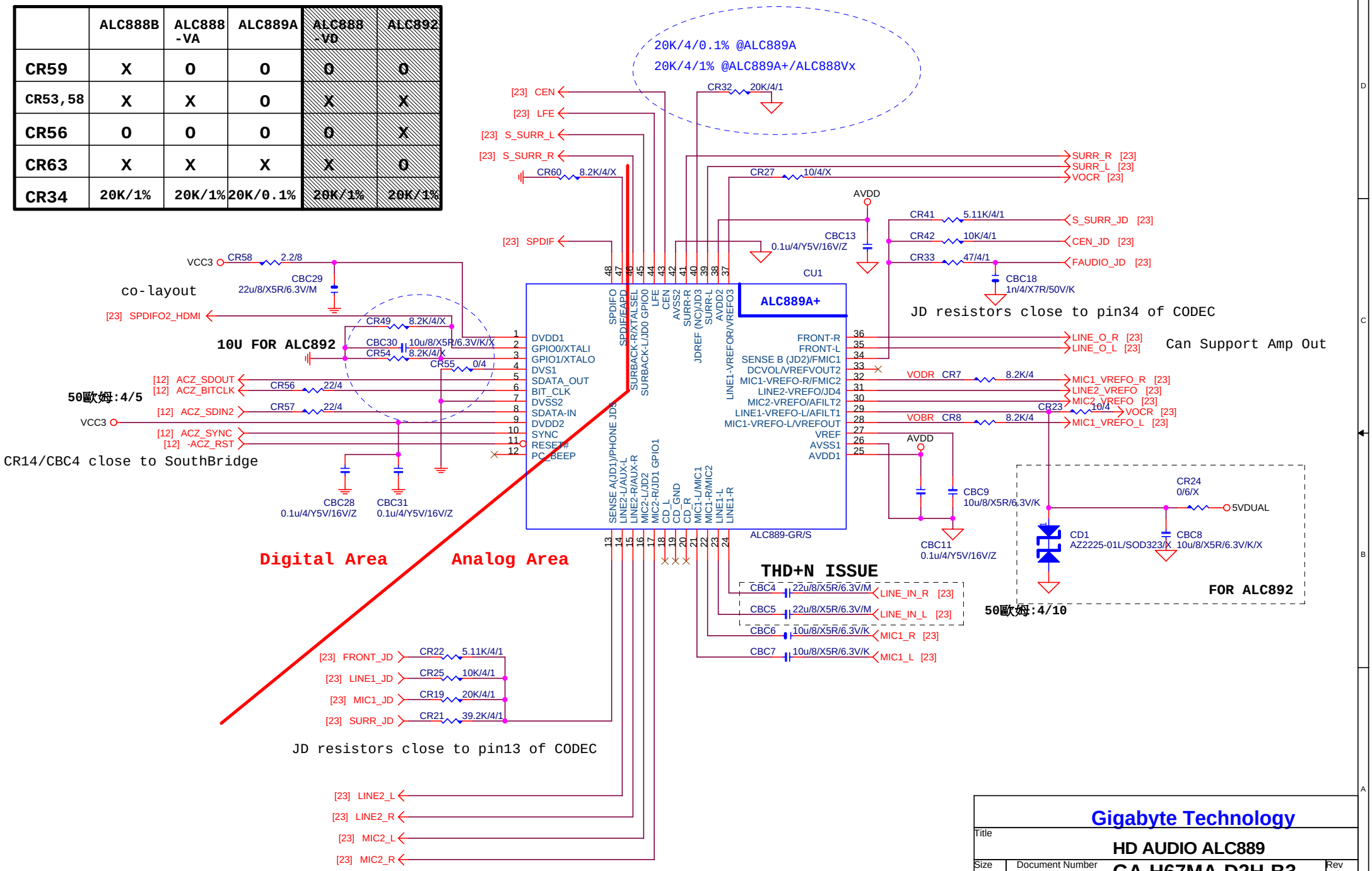

Gigabyte Technology		
Title	HD AUDIO ALC889	
Size Custom	Document Number GA-H67MA-D2H-B3	Rev 1.1
Date: Wednesday, February 09, 2011	Sheet 22 of 33	

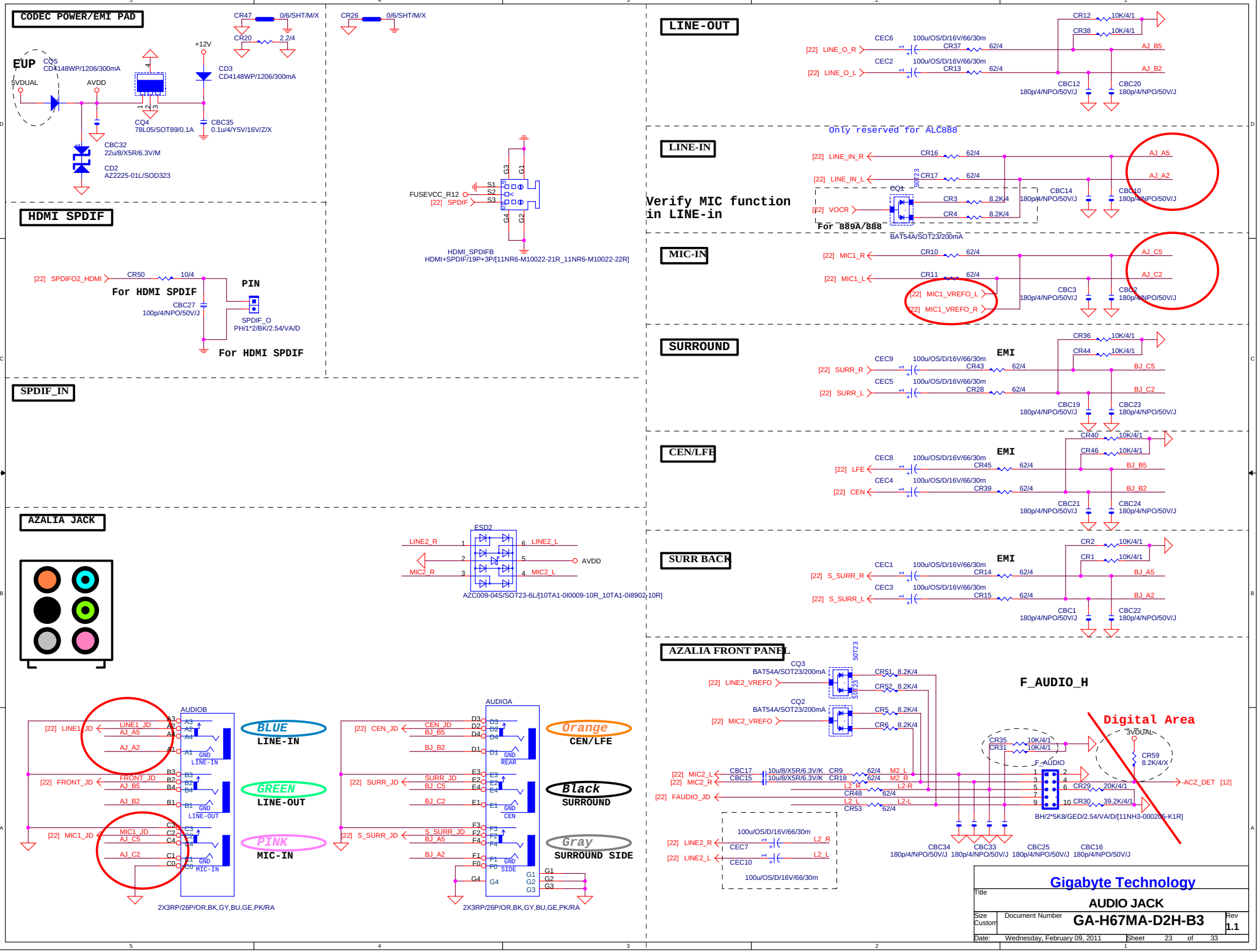
CODEC POWER/EMI PAD
EUP
CD5
CD4148WP/1206/300mA
5VDUAL
AVDD
CR47
0/6/SHT/M/X
CR20
2.2/4
+12V
CD3
CD4148WP/1206/300mA
CQ4
78L05/SOT89/0.1A
CBC35
0.1u/4/Y5V/16V/Z/X
CBC32
22u/8/X5R/6.3V/M
CD2
AZ2225-01L/SOD323
CR26
0/6/SHT/M/X
HDMI SPDIF
FUSEVCC_R12
[22] SPDIF
HDMI_SPDIFB
HDMI+SPDIF/19P+3P/[11NR6-M10022-21R_11NR6-M10022-22R]
[22] SPDIFO2_HDMI
CR50
10/4
For HDMI SPDIF
CBC27
100p/4/NPO/50V/J
PIN
SPDIF_O
PH/1*2/BK/2.54/VA/D
For HDMI SPDIF
SPDIF_IN
AZALIA JACK
ESD2
LINE2_R
MIC2_R
LINE2_L
MIC2_L
AVDD
AZC009-04S/SOT23-6L/[10TA1-0I0009-10R_10TA1-0I8902-10R]
AUDIOB
[22] LINE1_JD
LINE1_JD
AJ_A5
AJ_A2
LINE-IN
[22] FRONT_JD
FRONT_JD
AJ_B5
AJ_B2
LINE-OUT
[22] MIC1_JD
MIC1_JD
AJ_C5
AJ_C2
MIC-IN
BLUE
LINE-IN
GREEN
LINE-OUT
PINK
MIC-IN
2X3RP/26P/OR,BK,GY,BU,GE,PK/RA
AUDIOA
[22] CEN_JD
CEN_JD
BJ_B5
BJ_B2
REAR
[22] SURR_JD
SURR_JD
BJ_C5
BJ_C2
CEN
[22] S_SURR_JD
S_SURR_JD
BJ_A5
BJ_A2
SIDE
Orange
CEN/LFE
Black
SURROUND
Gray
SURROUND SIDE
2X3RP/26P/OR,BK,GY,BU,GE,PK/RA
LINE-OUT
[22] LINE_O_R
CEC6
100u/OS/D/16V/66/30m
CR37
62/4
[22] LINE_O_L
CEC2
CR13
CR12
10K/4/1
CR38
AJ_B5
AJ_B2
CBC12
180p/4/NPO/50V/J
CBC20
180p/4/NPO/50V/J
LINE-IN
Only reserved for ALC888
[22] LINE_IN_R
CR16
[22] LINE_IN_L
CR17
CQ1
SOT23
[22] VOCR
CR3
8.2K/4
CR4
For 889A/888
BAT54A/SOT23/200mA
CBC14
CBC10
AJ_A5
AJ_A2
Verify MIC function in LINE-in
MIC-IN
[22] MIC1_R
CR10
[22] MIC1_L
CR11
[22] MIC1_VREFO_L
[22] MIC1_VREFO_R
CBC3
CBC2
AJ_C5
AJ_C2
SURROUND
EMI
[22] SURR_R
CEC9
CR43
[22] SURR_L
CEC5
CR28
CR36
CR44
BJ_C5
BJ_C2
CBC19
CBC23
CEN/LFE
[22] LFE
CEC8
CR45
[22] CEN
CEC4
CR39
CR40
CR46
BJ_B5
BJ_B2
CBC21
CBC24
SURR BACK
[22] S_SURR_R
CEC1
CR14
[22] S_SURR_L
CEC3
CR15
CR2
CR1
BJ_A5
BJ_A2
CBC1
CBC22
AZALIA FRONT PANEL
CQ3
BAT54A/SOT23/200mA
[22] LINE2_VREFO
CR51
8.2K/4
CR52
CQ2
[22] MIC2_VREFO
CR5
CR6
F_AUDIO_H
Digital Area
3VDUAL
CR35
CR31
CR59
8.2K/4/X
F_AUDIO
[22] MIC2_L
CBC17
10u/8/X5R/6.3V/K
CR9
M2_L
[22] MIC2_R
CBC15
CR18
M2_R
L2_R
L2-R
[22] FAUDIO_JD
CR48
L2_L
L2-L
CR53
CR29
20K/4/1
CR30
39.2K/4/1
ACZ_DET [12]
BH/2*5K8/GED/2.54/VA/D/[11NH3-000205-K1R]
[22] LINE2_R
CEC7
[22] LINE2_L
CEC10
100u/OS/D/16V/66/30m
CBC34
CBC33
CBC25
CBC16
180p/4/NPO/50V/J
Gigabyte Technology
Title
AUDIO JACK
Size
Custom
Document Number
GA-H67MA-D2H-B3
Rev
1.1
Date: Wednesday, February 09, 2011
Sheet 23 of 33

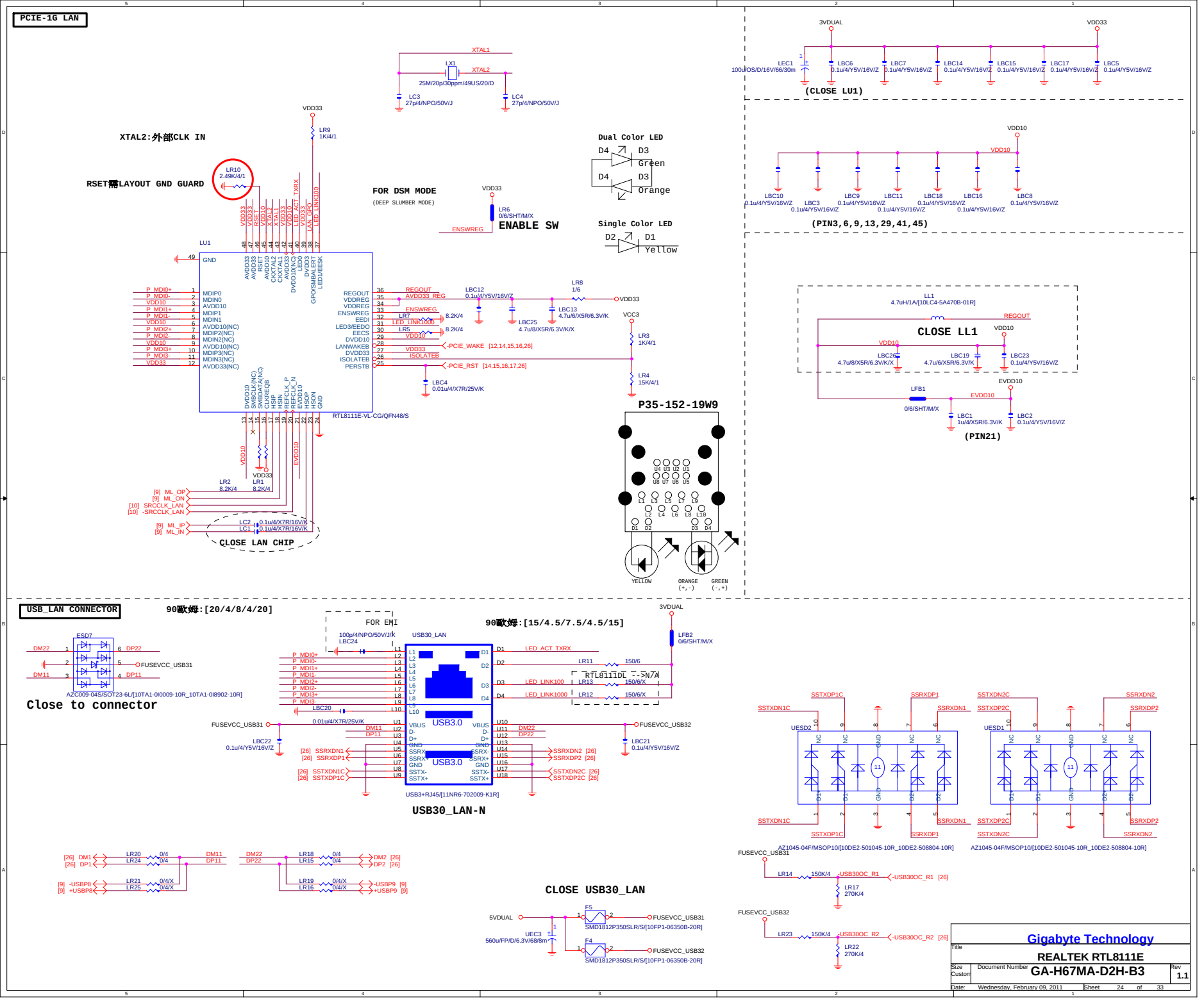
PCIE-1G LAN
XTAL2:外部CLK IN
RSET需LAYOUT GND GUARD
FOR DSM MODE
(DEEP SLUMBER MODE)
ENABLE SW
Dual Color LED
Single Color LED
LU1
RTL8111E-VL-CG/QFN48/S
CLOSE LAN CHIP
P35-152-19W9
YELLOW
ORANGE (+,-)
GREEN (-,+)
(CLOSE LU1)
(PIN3,6,9,13,29,41,45)
CLOSE LL1
(PIN21)
USB_LAN CONNECTOR
90歐姆:[20/4/8/4/20]
FOR EMI
90歐姆:[15/4.5/7.5/4.5/15]
RTL8111DL -->N/A
Close to connector
USB30_LAN-N
CLOSE USB30_LAN
Gigabyte Technology
REALTEK RTL8111E
GA-H67MA-D2H-B3
Rev 1.1
Date: Wednesday, February 09, 2011
Sheet 24 of 33

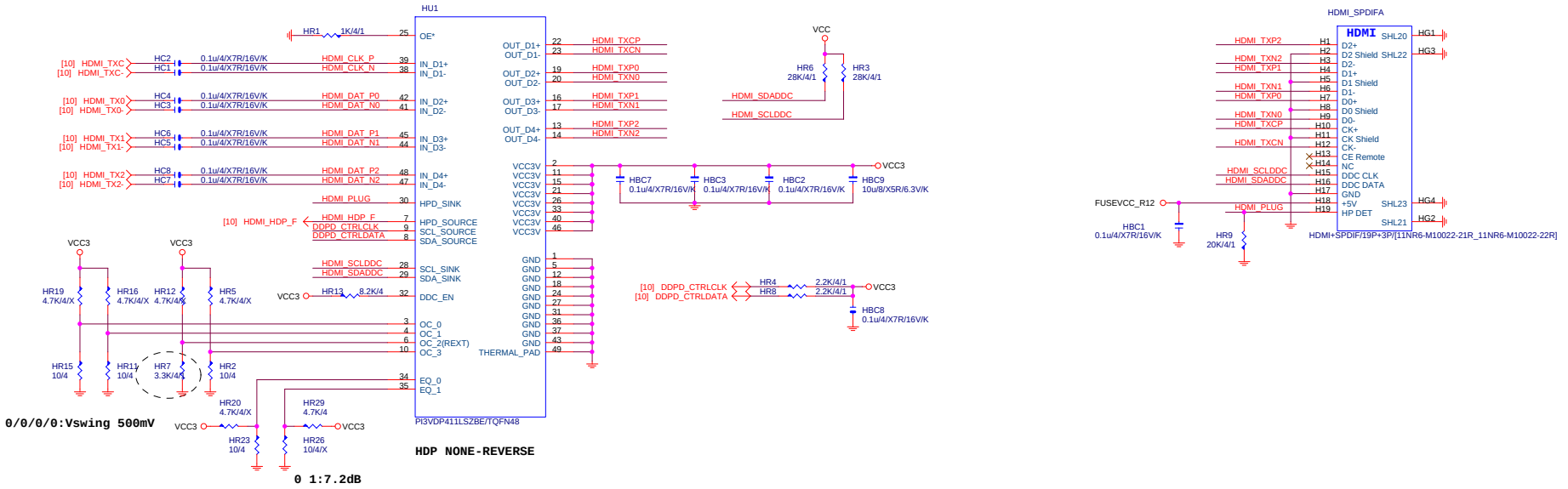

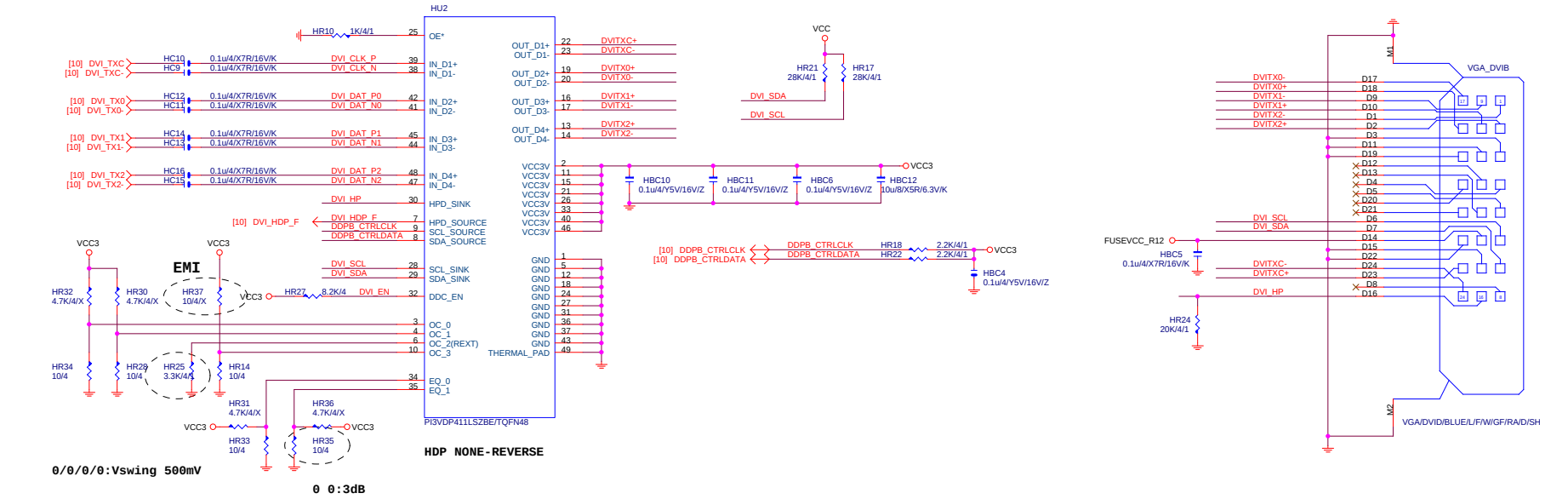

Gigabyte Technology			
Title: HDMI / DVI			
Size: Custom	Document Number: GA-H67MA-D2H-B3		Rev: 1.1
Date: Wednesday, February 09, 2011	Sheet 25 of 33		

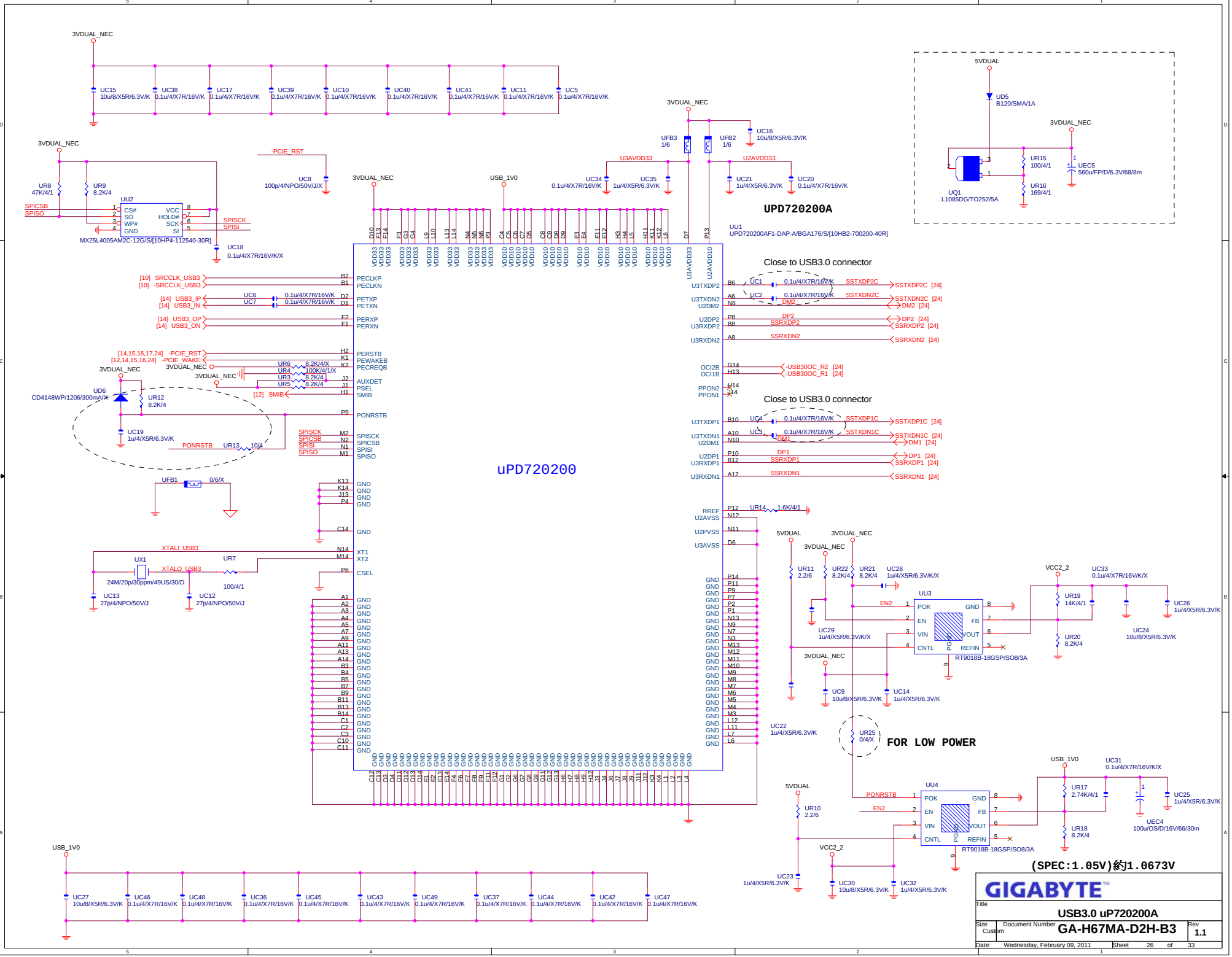
uPD720200
UPD720200A
UU1
UPD720200AF1-DAP-A/BGA176/S/[10HB2-700200-40R]
Close to USB3.0 connector
Close to USB3.0 connector
FOR LOW Power
(SPEC:1.05V)約1.0673V
UU2
MX25L4005AM2C-12G/S/[10HP4-112540-30R]
UU3
RT9018B-18GSP/SO8/3A
UU4
RT9018B-18GSP/SO8/3A
UQ1
L1085DG/TO252/5A
UD5
B120/SMA/1A
UD6
CD4148WP/1206/300mA/K
UX1
24M/20p/30ppm/49US/30/D
3VDUAL_NEC
5VDUAL
USB_1V0
-PCIE_RST
XTALI_USB3
XTALO_USB3
PONRSTB
EN2
GIGABYTE
Title
USB3.0 uP720200A
Size
Custom
Document Number
GA-H67MA-D2H-B3
Rev
1.1
Date:
Wednesday, February 09, 2011
Sheet
26
of
33

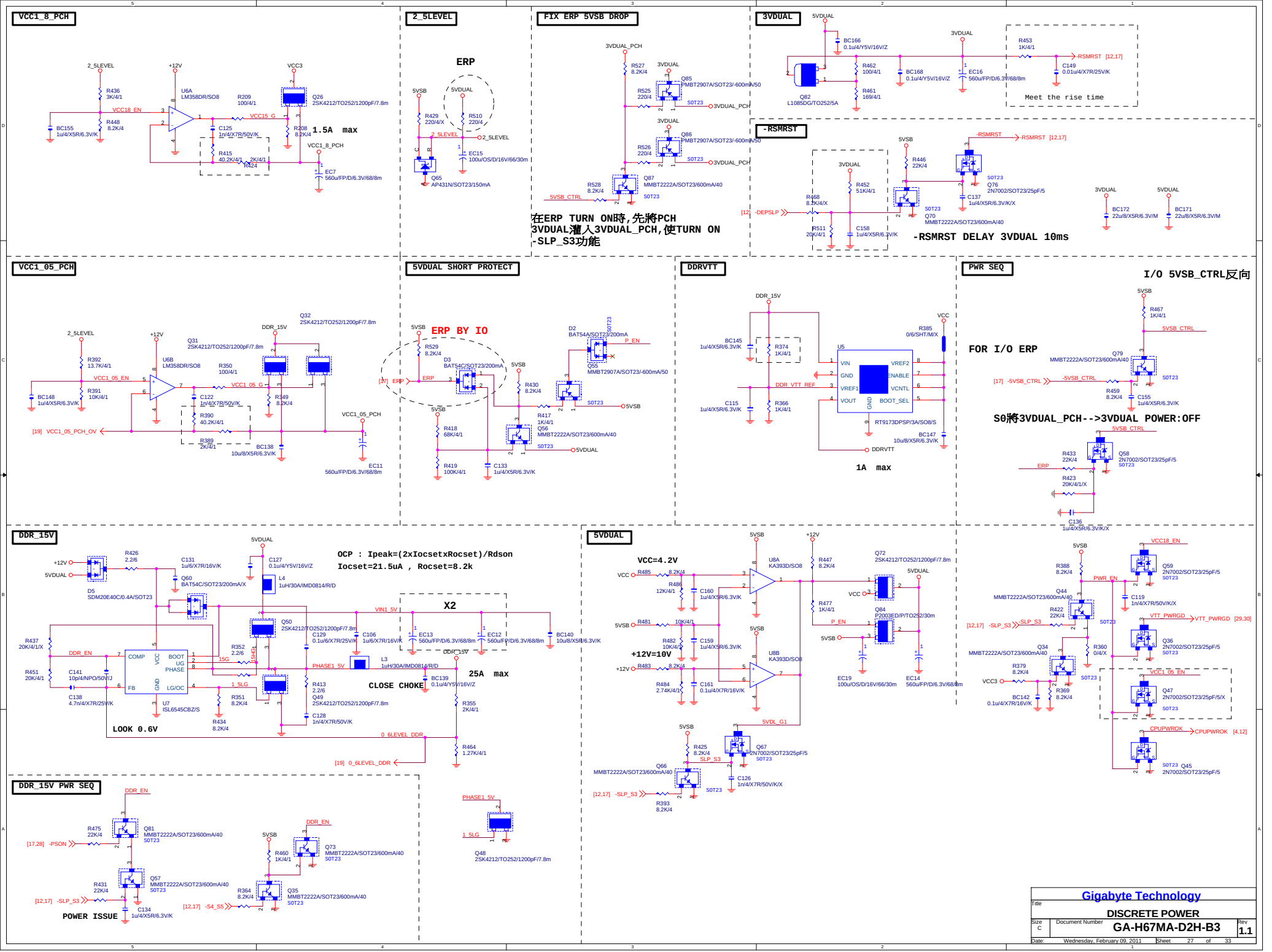
VCC1_8_PCH
2_5LEVEL
ERP
FIX ERP 5VSB DROP
3VDUAL
-RSMRST
1.5A max
Meet the rise time
在ERP TURN ON時,先將PCH
3VDUAL灌入3VDUAL_PCH,使TURN ON
-SLP_S3功能
-RSMRST DELAY 3VDUAL 10ms
VCC1_05_PCH
5VDUAL SHORT PROTECT
ERP BY IO
DDRVTT
PWR SEQ
I/O 5VSB_CTRL反向
FOR I/O ERP
S0將3VDUAL_PCH-->3VDUAL POWER:OFF
1A max
DDR_15V
OCP : Ipeak=(2xIocsetxRocset)/Rdson
Iocset=21.5uA , Rocset=8.2k
X2
25A max
CLOSE CHOKE
LOOK 0.6V
5VDUAL
VCC=4.2V
+12V=10V
DDR_15V PWR SEQ
POWER ISSUE
Gigabyte Technology
Title
DISCRETE POWER
Size C
Document Number
GA-H67MA-D2H-B3
Rev 1.1
Date: Wednesday, February 09, 2011
Sheet 27 of 33

ATXX24 POWER CONNECTOR

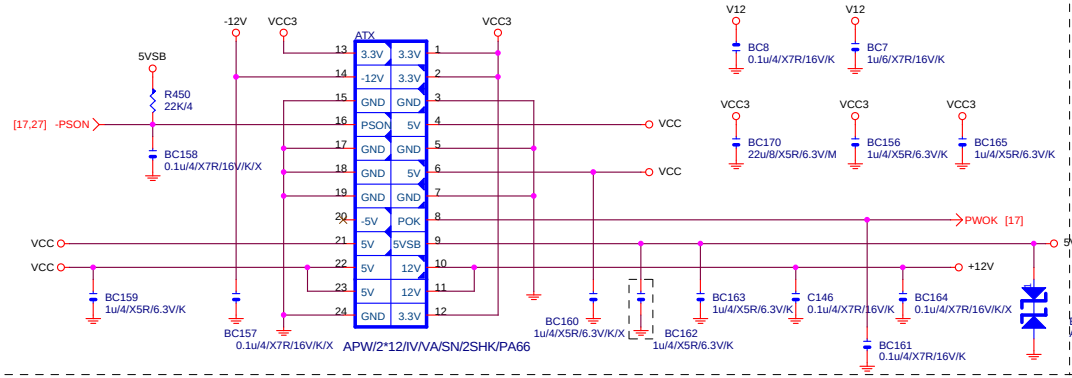

ATXX4 POWER CONNECTOR

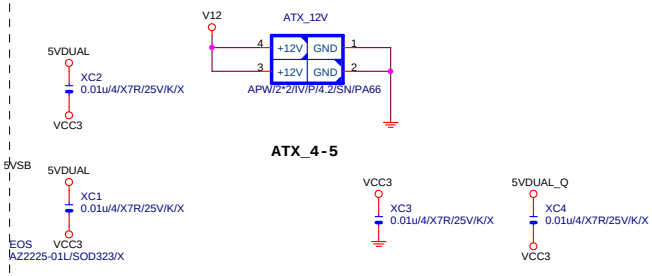

ATX_4-5

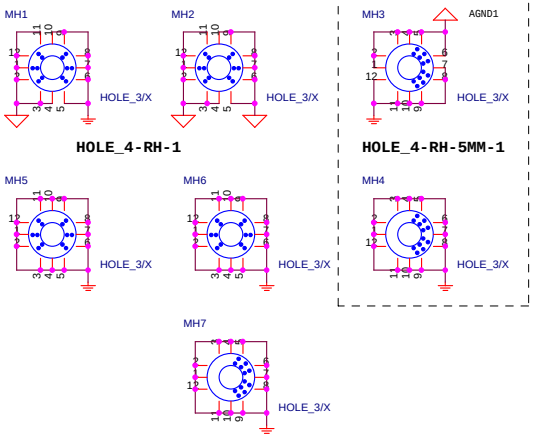

HOLE_4-RH-1

HOLE_4-RH-5MM-1

HOLE_4-RH-5MM-1 **HOLE_4-RH-5MM-5PIN-1**

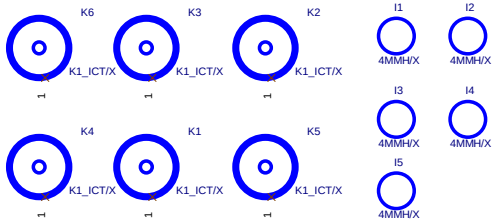

To prevent the 5VSB under loading when boot

5VDUAL1(USB PORT/DDRIII POWER)
5VDUAL(3VDUAL/OTHER)

-S_WARN-->5VDUAL1-->-S_ACK(PCH)-->-DEPSLP/-RSMRST-->5VDUAL-->3VDUAL

Gigabyte Technology			
Title	ATX CONNECTOR		
Size Custom	Document Number	GA-H67MA-D2H-B3	Rev 1.1
Date: Wednesday, February 09, 2011	Sheet 28 of 33		

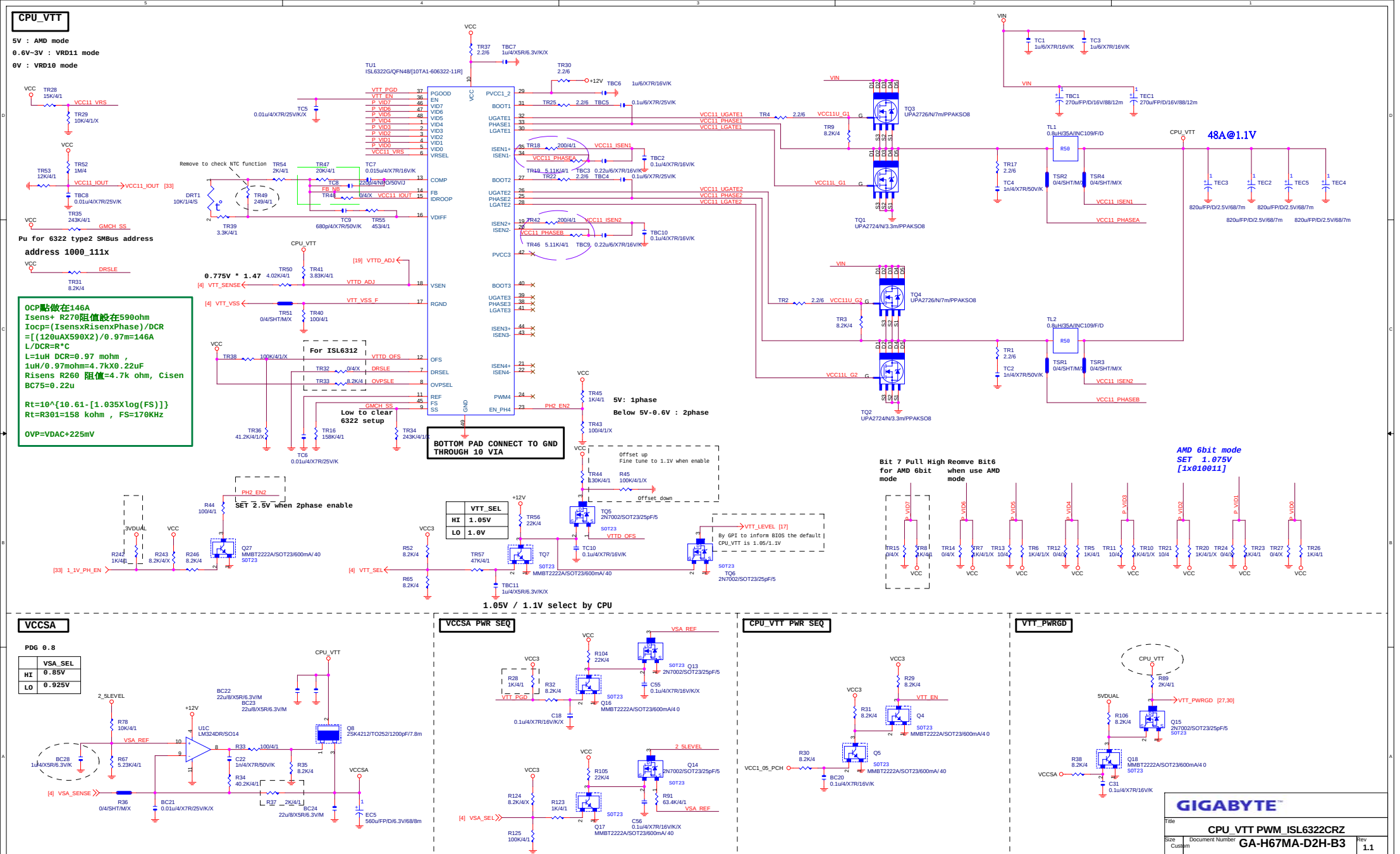
CPU_VTT
5V : AMD mode
0.6V~3V : VRD11 mode
0V : VRD10 mode
TU1
ISL6322G/QFN48/[10TA1-606322-11R]
Pu for 6322 type2 SMBus address
address 1000_111x
OCP點做在146A
Isens+ R270阻值設在590ohm
Iocp=(IsensxRisenxPhase)/DCR
=[(120uAX590X2)/0.97m=146A
L/DCR=R*C
L=1uH DCR=0.97 mohm ,
1uH/0.97mohm=4.7kX0.22uF
Risens R260 阻值=4.7k ohm, Cisen
BC75=0.22u
Rt=10^{10.61-[1.035Xlog(FS)]}
Rt=R301=158 kohm , FS=170KHz
OVP=VDAC+225mV
0.775V * 1.47
For ISL6312
Low to clear
6322 setup
BOTTOM PAD CONNECT TO GND
THROUGH 10 VIA
5V: 1phase
Below 5V-0.6V : 2phase
Offset up
Fine tune to 1.1V when enable
SET 2.5V when 2phase enable
1.05V / 1.1V select by CPU
48A@1.1V
AMD 6bit mode
SET 1.075V
[1x010011]
Bit 7 Pull High
for AMD 6bit mode
Reomve Bit6
when use AMD mode
VCCSA
PDG 0.8
VSA_SEL
HI 0.85V
LO 0.925V
VCCSA PWR SEQ
CPU_VTT PWR SEQ
VTT_PWRGD
GIGABYTE
CPU_VTT PWM_ISL6322CRZ
GA-H67MA-D2H-B3
Rev 1.1
Date: Friday, February 11, 2011
Sheet 29 of 33

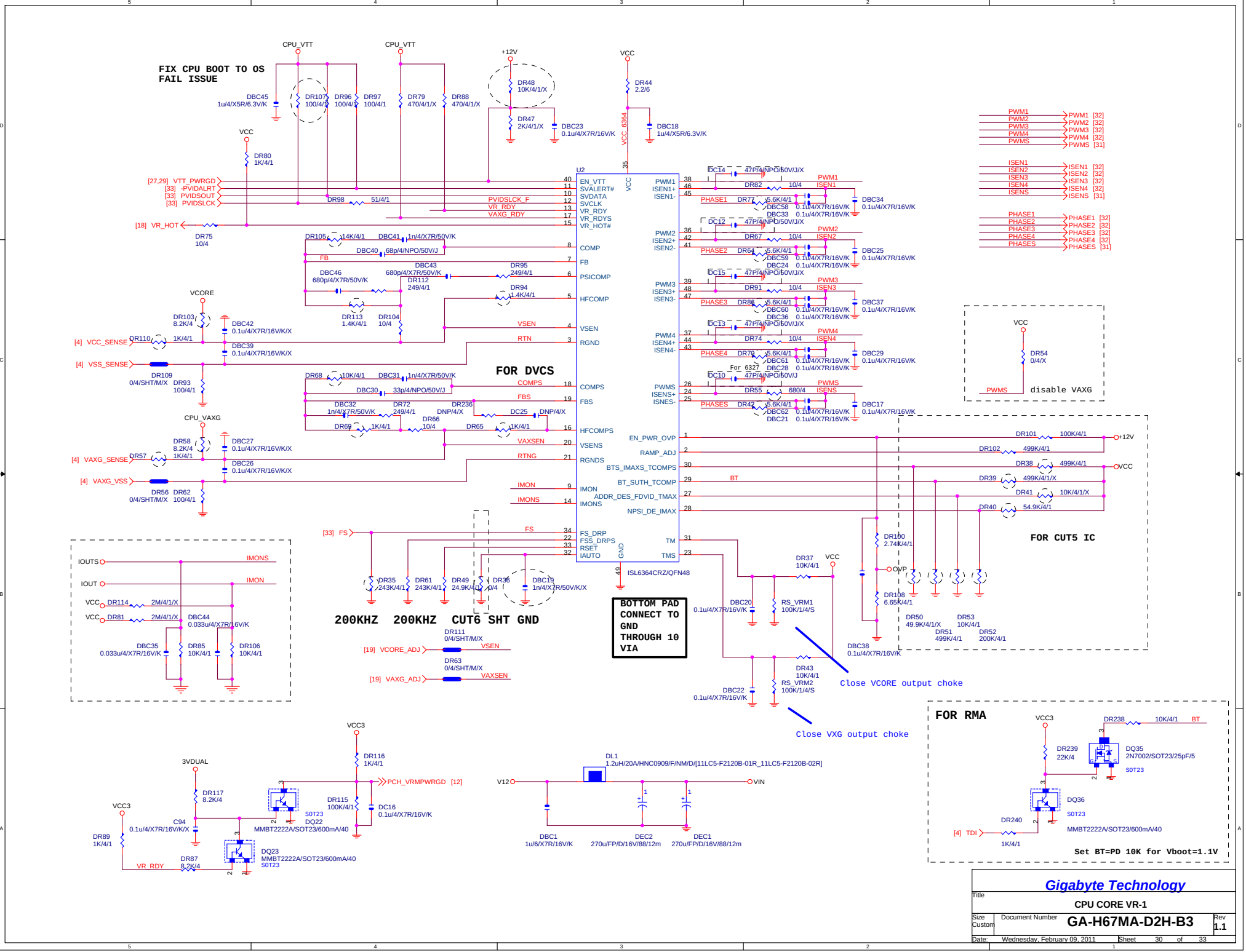
FIX CPU BOOT TO OS FAIL ISSUE
CPU_VTT
+12V
VCC
U2
ISL6364CRZ/QFN48
FOR DVCS
FOR CUT5 IC
disable VAXG
BOTTOM PAD CONNECT TO GND THROUGH 10 VIA
200KHZ 200KHZ CUT6 SHT GND
Close VCORE output choke
Close VXG output choke
FOR RMA
Set BT=PD 10K for Vboot=1.1V
Gigabyte Technology
CPU CORE VR-1
GA-H67MA-D2H-B3
Rev 1.1
Wednesday, February 09, 2011
Sheet 30 of 33

VAXG

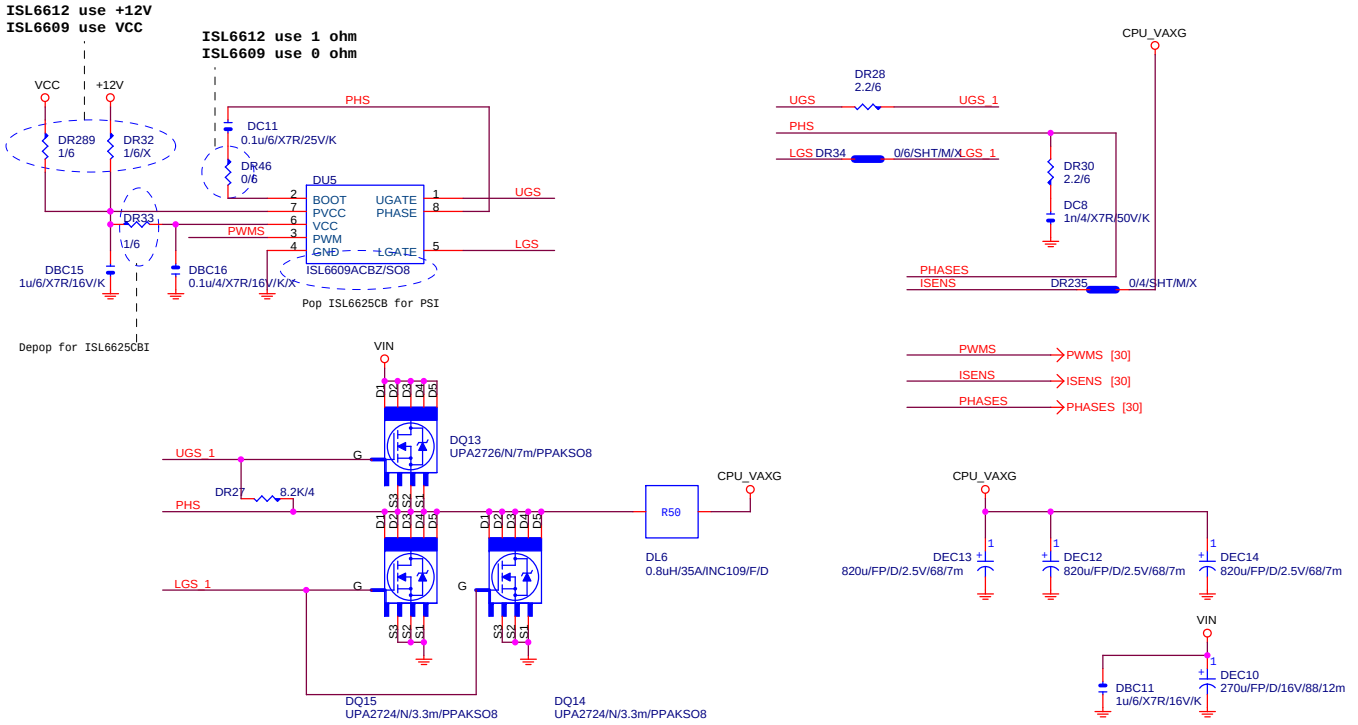

MOS HEATSINK

MOSHSINK-P67A-D3

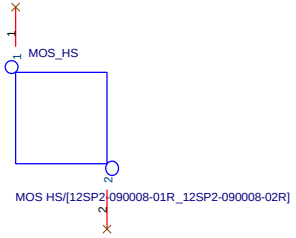

PHASE LED

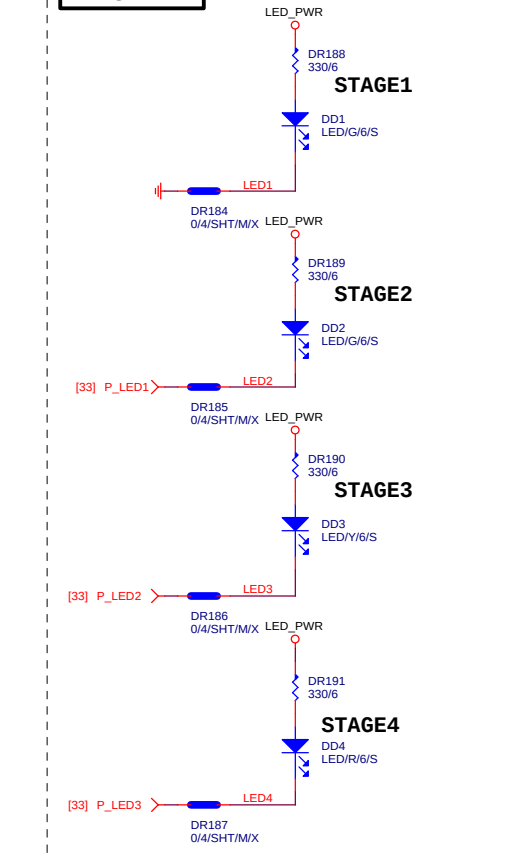

LED POWER

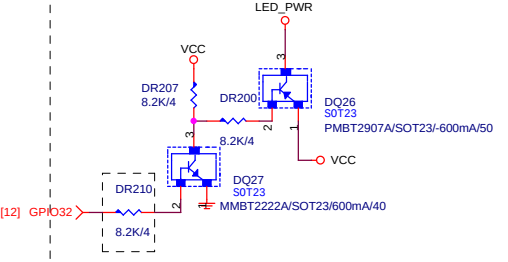

Gigabyte Technology

Title	CPU CORE VR-2		
Size Custom	Document Number	GA-H67MA-D2H-B3	Rev 1.1
Date: Friday, February 11, 2011	Sheet 31 of 33		

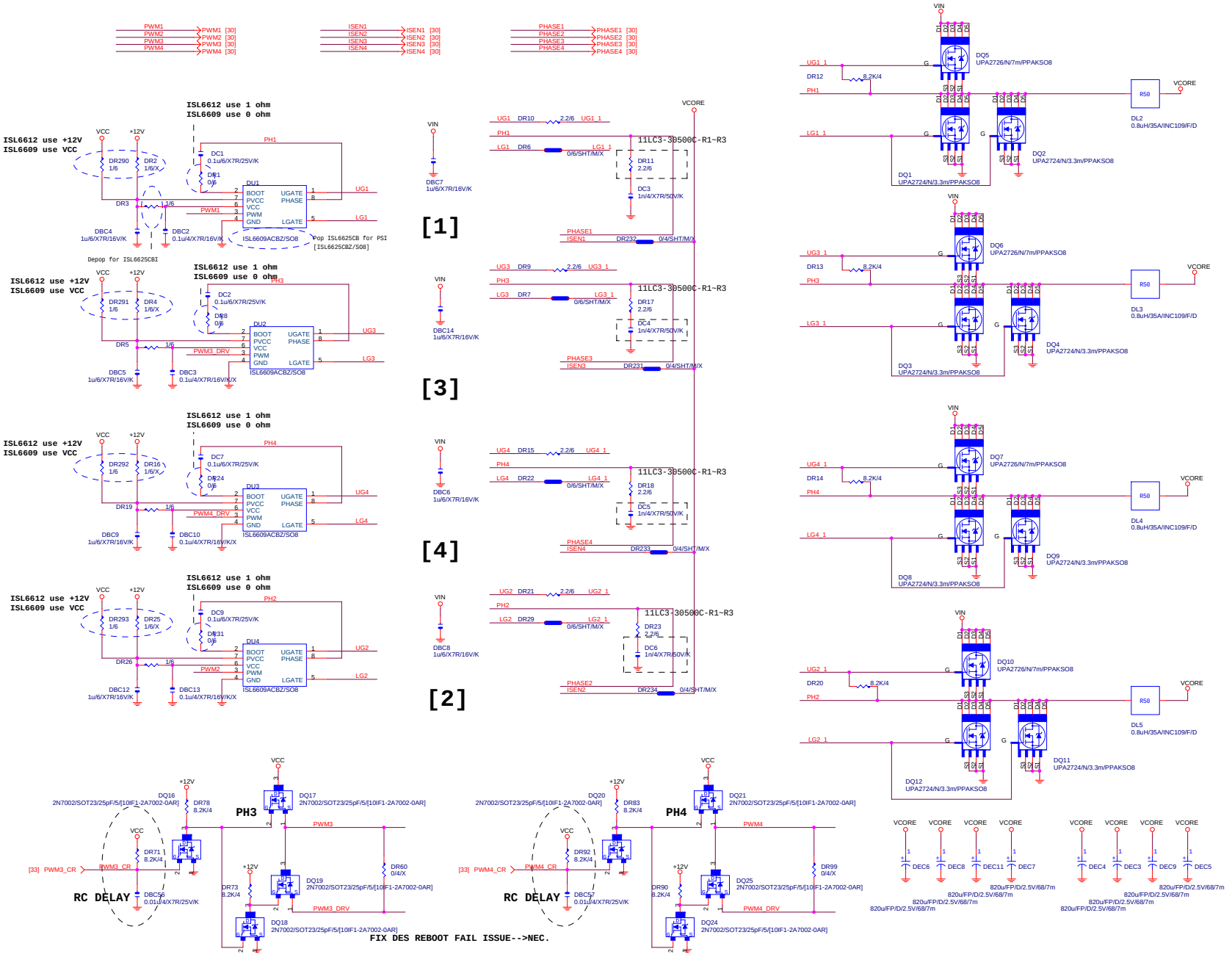

Gigabyte Technology	
Title	CPU CORE VR-3
Size Custom	Document Number GA-H67MA-D2H-B3
Rev	1.1
Date: Friday, February 11, 2011	Sheet 32 of 33

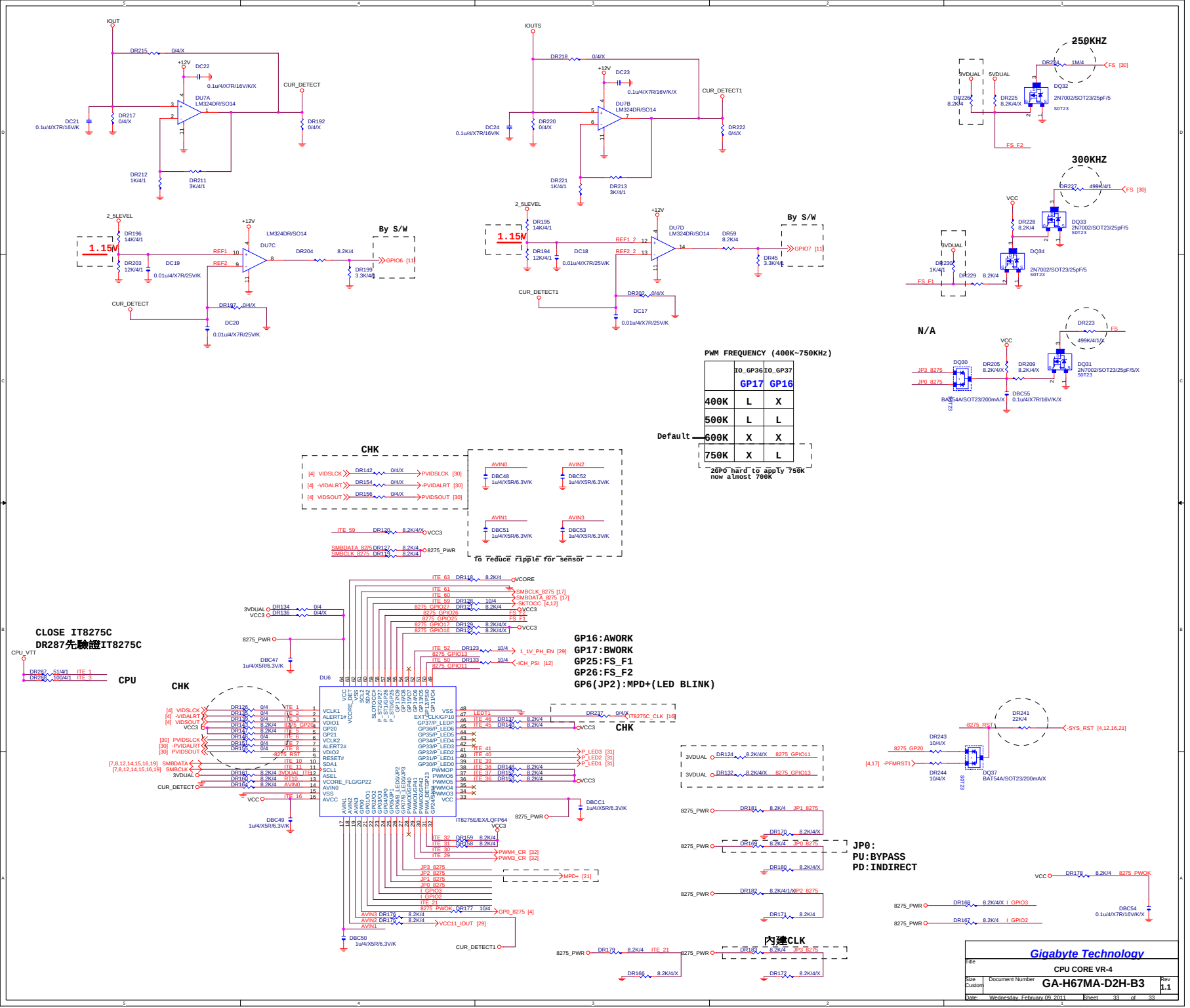

PWM FREQUENCY (400K~750KHz)

	IO_GP36 GP17	IO_GP37 GP16
400K	L	X
500K	L	L
600K (Default)	X	X
750K	X	L

26P0 hard to apply 750K now almost 700K

fo reduce ripple for sensor